CITY OF RYE

NOTICE

There will be a regular meeting of the City Council of the City of Rye on Wednesday, May 11, 2016, at 7:30 p.m. at the **Square House**. *The meeting will move from the Square House to Council Chambers in City Hall at approximately 8:45 p.m.* ~~*The Council will convene at 6:30 p.m. and it is expected they will adjourn into Executive Session at 6:31 p.m. to discuss attorney client matters.*~~

AMENDED AGENDA

1. Pledge of Allegiance.

2. Roll Call.

3. General Announcements.

4. Approval of the election of one new member to the Rye Fire Department.

5. Draft unapproved minutes of the regular meeting of the City Council held April 27, 2016.

6. Issues Update/Old Business.

7. Authorization for City Manager to sign the proposed amendment to the existing License Agreement for 88 Davis LLC.

7A. Resolution to transfer $50,000 from the Contingent Account to the Building and Vehicle Fund, Recreation Thruway Fields Project for a feasibility review associated with an athletic facility development at the NYS Thruway property.
Roll Call.

8. Consideration to set a Public Hearing for June 8, 2016 regarding the request submitted by Crown Castle to amend their agreement with the City and for the installation of additional locations to their existing wireless telecommunications located in the City of Rye.

9. Consideration of Resolution establishing a new policy for grievance filings for current and former City employees, Rye City Officials, and members of the Board of Assessment Review.

10. Residents may be heard on matters for Council consideration that do not appear on the agenda.

11. Miscellaneous communications and reports.

12. New Business.

13. Adjournment.

* *

The next regular meeting of the City Council will be held on Wednesday, May 25, 2016 at 7:30 p.m.

** City Council meetings are available live on Cablevision Channel 75, Verizon Channel 39, and on the City Website, indexed by Agenda item, at www.ryeny.gov under “RyeTV Live”.

* Office Hours of the Mayor by appointment by emailing jsack@ryeny.gov or contacting the City Manager’s Office at (914) 967-7404.

CITY COUNCIL AGENDA

NO. 4 DEPT.: Fire Department DATE: May 11, 2016

CONTACT: Fire Department

AGENDA ITEM: Approval of the election of one new member to the Rye Fire Department.

FOR THE MEETING OF:
May 11, 2016

RYE CITY CODE,
CHAPTER
SECTION

RECOMMENDATION: That the Council approve the election of Kevin Ramsey to the Milton Point Engine and Hose Company.

IMPACT: ☐ Environmental ☐ Fiscal ☐ Neighborhood ☒ Other:

BACKGROUND: The Board of Fire Wardens has advised that Kevin Ramsey was elected into membership to the Milton Point Engine and Hose Company and approved by the Board of Fire Wardens at their May meeting.

CITY COUNCIL AGENDA

NO. 5 DEPT.: City Clerk DATE: May 11, 2016

CONTACT: Carolyn D'Andrea, City Clerk

AGENDA ITEM Draft unapproved minutes of the regular meeting of the City Council held April 27, 2016.

FOR THE MEETING OF:
May 11, 2016
RYE CITY CODE,
CHAPTER
SECTION

RECOMMENDATION: That the Council approve the draft minutes.

IMPACT: ☐ Environmental ☐ Fiscal ☐ Neighborhood ☒ Other:

BACKGROUND: Approve the minutes of the Regular Meeting of the City Council held April 27, 2016, as attached.

DRAFT UNAPPROVED MINUTES of the Regular Meeting of the City Council of the City of Rye held in City Hall on April 27, 2016 at 7:30 P.M.

PRESENT:

JOSEPH A. SACK Mayor
KIRSTIN BUCCI
EMILY HURD
JULIE KILLIAN
RICHARD MECCA
TERRENCE McCARTNEY
DANIELLE TAGGER-EPSTEIN
Councilmembers

ABSENT: None

The Council convened at 7:00 P.M. Councilman McCartney made a motion, seconded by Councilwoman Hurd and unanimously carried to immediately adjourn into Executive Session to discuss litigation and personnel matters. Councilman McCartney made a motion, seconded by Councilwoman Hurd and unanimously carried, to adjourn the Executive Session at 7:30 P.M. The regular meeting convened at 7:35 P.M.

1. Pledge of Allegiance.

Mayor Sack called the meeting to order and invited the Council to join in the Pledge of Allegiance.

2. Roll Call.

Mayor Sack asked the Corporation Counsel to call the roll; a quorum was present to conduct official City business.

3. General Announcements.

Councilwoman Tagger-Epstein announced that the Friends of the Rye Sustainability Committee have started a Facebook page. She also announced that the Senior Summit was a huge success with a great turnout.

Councilman McCartney reminded residents that the Rye Golf Club Opening Day Scramble will be held on May 1, 2016. Also, early enrollment is due for the Rye Golf Club pool membership on May 13, 2016. Councilman McCartney also stated that Rye Recreation summer camps are filling up, and encouraged residents to visit the Recreation website.

Councilwoman Bucci announced that the Library Science Fair will be held Sunday, May 22, 2016 from 1:00-4:00 P.M. on the Village Green.

Councilwoman Hurd announced that the Memorial Day Parade will occur as planned.

Councilwoman Killian announced the sad news that Elliot Meister, a 2014 Rye High School graduated passed away at the tender age of 20 years old. There was a moment of silence held by the Council. He will be greatly missed by his family and friends in Rye and beyond. She lastly stated that raising our children is incredibly difficult and we need to come together as parents and as a community.

Joseph Murphy, Senior Advocacy Committee, addressed the Council and reported on the Senior Summit. Eighty residents attended the event, which addressed senior issues. He is looking to hold another event, which will cost $650. He thanked the Mayor for his address at the Senior Summit and Councilwoman Tagger-Epstein for her help as liaison.

4. Approval of the election of one new member to the Rye Fire Department.

Councilman Mecca stated that Joseph Ganci was elected to membership to the Poningoe Hook and Ladder Company as the newest member to the Engine Company and we welcome him to the Fire Department.

Councilman Mecca made a motion, seconded by Councilwoman Bucci, and unanimously carried, to approve Joseph Ganci as a member of the Rye Fire Department.

5. Draft unapproved minutes of the regular meeting of the City Council held April 13, 2016.

Councilman Mecca made a motion, seconded by Councilwoman Hurd and unanimously carried, to adopt the minutes of the regular meeting of the City Council held April 13, 2016.

6. Issues Update/Old Business.

Assistant City Manager Militana provided an update on the New York Rising grant, noting that there was a meeting with staff from the Governor's office, and an RFQ was sent out in January for modifications for the Sluice Gate. No engineering firms responded to the RFQ, and as a result, the City in working with the Governor's office has decided to work with the Dormitory Authority of the State of New York (DASNY). DASNY has chosen the engineering firm of O'Brien and Gear who specializes in dam work. City staff recently met with the Governor's office and Rye Brook staff to discuss the grant projects. The stormwater drainage project at Milton Road was discussed, as well as the Upper Pond resizing project, which will remove silt. She briefly discussed that one of the originally proposed projects located on the SUNY Purchase grounds would no longer be explored, after the City was advised that the grounds would be forever preserved as open space. Assistant City Manager Militana also announced that there will be another meeting on April 28, 2016 regarding the projects for the New York Rising grant.

Councilwoman Killian inquired as to what happened with the original retention project proposed on the SUNY Purchase grounds. Assistant City Manager Militana responded that a review of the originally proposed projects by the City, DASNY and the engineering firm shifted

the priorities. Further, the campus had internal concerns about the retaining ponds. Councilman Mecca expressed comments concerning moving forward with water retention.

Mayor Sack stated that he was not surprised by the outcome of the SUNY Purchase project. He inquired about the RFQ that was put out by the City. Assistant City Militana explained that it is a very technical project that requires specialized knowledge, which is perhaps the reason that there were no bids submitted. However, as the City is now being aided by DASNY, the State agency has the authority to retain an engineering firm with the specific skill called for by the proposed projects.

Councilwoman Hurd commented that she has done research concerning the "forever wild" designation by SUNY Purchase, which may require certain environmental issues.

There was general discussion concerning the New York Rising grant funds.

Assistant City Manager Militana announced that regarding the Central Business District improvements, bid specifications are being done in house by the City Engineer and expected to be collected in May 2016. It is anticipated that the City Council will have the opportunity to approve the bid results at the June meeting. The Memorial Day Parade will take place as originally planned beginning at the train station and progressing down Purchase Street down to the Village Green.

Councilwoman Killian inquired as to certain aesthetics and safety measures within the downtown area, encouraging such measures to be a part of the bid.

Concerning the MTA Central Avenue Bridge closure, Assistant City Manager Militana stated that the MTA has acknowledged that the bridge is in disrepair. The bridge has been closed and the City has been working with MTA to improve the detour route. It is anticipated that the bridge will be closed for six months. The bridge will remain open for pedestrian traffic.

There was general discussion over the bridge. Councilwoman Tagger-Epstein stated that unfortunately, the closure is out the City's control, but she is hopeful that the results of the work will be positive.

Mayor Sack stated that concerning the Traveler's law suit, the City Manager's office will be executing the general release shortly.

7. <u>Resolution to approve the project to switch street lights in the City of Rye to LED lighting.</u>

Assistant City Manager reviewed the project with the Council and stated that the City DPW is looking to move forward with the project. The test light has been installed in the City Hall parking lot. The Council took a two minute recess to examine the test light.

After the review of the light, the Council had positive feedback. Councilwoman Tagger-Epstein made a motion, seconded by Councilwoman Killian, to approve Resolution 2016-16, the project to change the street lights in the City of Rye to LED lighting.

ROLL CALL
AYES: Mayor Sack, Councilmembers Bucci, Hurd, Killian, McCartney, Mecca and Tagger-Epstein
NAYS: None
ABSENT: None

8. Resolution to transfer $350,000 from the Capital Projects Fund Balance for the LED lighting project.

Assistant City Manager Militana explained that with a switch to LED lighting, there will be savings across the City in terms of both labor and energy savings. This funding transfer will allow for the proposed project to move forward, as this particular project was not contemplated during the budget discussions.

Councilman Mecca commented on the project being an investment with a return for the City. Councilwoman Killian agreed that there will be savings going forward by the approval of the LED light project. There was further discussion about moving forward with the cost savings.

Councilman McCartney made a motion, seconded by Councilman Mecca and unanimously carried, to adopt Resolution 2016-17, approving the transfer of $350,000 from the Capital Projects Fund Balance for the LED lighting project.

ROLL CALL
AYES: Mayor Sack, Councilmembers Bucci, Hurd, Killian, McCartney, Mecca and Tagger-Epstein
NAYS: None
ABSENT: None

9. Resolution to transfer $2,000 from the City Manager Consultant line to the Building and Vehicle Fund, Recreation Thruway Fields Fund for the appraisal and Phase I Environmental Site Assessment on the NYS Thruway property.

Mayor Sack explained that the funds proposed would be used to study and assess the Recreation Thruway Field property on any environmental issues prior to the City moving forward on any possible acquisition of this property.

Mayor Sack made a motion, seconded by Councilman Mecca and unanimously carried, to adopt Resolution 2016-18, approving the transfer of $2,000 from the City Manager Consultant line to the Building and Vehicle Fund for the appraisal and Phase I Environmental Site Assessment on the NYS Thruway property.

ROLL CALL
AYES: Mayor Sack, Councilmembers Bucci, Hurd, Killian, McCartney, Mecca and Tagger-Epstein
NAYS: None
ABSENT: None

10. Residents may be heard on matters for Council consideration that do not appear on the agenda.

There was nothing discussed under this agenda item.

11. Resolution for the Rye Golf Club to waive guest fees on June 7, 2016 from 4:00 p.m. to close of business in participation of national "Women's Golf Day".

Councilman McCartney made a motion, seconded by Councilwoman Bucci and unanimously carried, to adopt Resolution 2016-19, which will waive the guest fees on June 7, 2016 between 4:00 P.M. to close of business in participation with Women's Golf Day.

ROLL CALL
AYES: Mayor Sack, Councilmembers Bucci, Hurd, Killian, McCartney, Mecca and Tagger-Epstein
NAYS: None
ABSENT: None

12. Consideration of request to amend local law Chapter 191, Vehicles and Traffic, of the Rye City Code, Section 191-19.1, "Parking prohibited certain hours", to prohibit parking on the east side of Boston Post Road in front of the Resurrection Middle School from 7:30 a.m. to 8:30 a.m. and 2:00 p.m. to 4:00 p.m.

Assistant City Manager Militana explained that the Director of Facilities for Resurrection School met with the City Manager's office and the Traffic and Pedestrian Safety Committee on the issue concerning drop off dismissal times. Councilwoman Tagger-Epstein explained that there is a safety issue that occurs with busy school ingress and egress times and this proposed amendment will hopefully alleviate some of the issues.

Councilwoman Tagger-Epstein made a motion, seconded by Councilwoman Hurd and unanimously carried, to amend local law Chapter 191, Vehicles and Traffic, of the Rye City Code, Section 191-19.1, "Parking prohibited certain hours", to prohibit parking on the east side of Boston Post Road in front of the Resurrection Middle School from 7:30 a.m. to 8:30 a.m. and 2:00 p.m. to 4:00 p.m.

ROLL CALL
AYES: Mayor Sack, Councilmembers Bucci, Hurd, Killian, McCartney, Mecca and Tagger-Epstein
NAYS: None

ABSENT: None

13. Consideration of request to amend local law Chapter 191, "Vehicles and Traffic", of the Rye City Code, Section §191-20, "Parking time limited", Subsection (E) "Fifteen-minute limit" to designate four parking spaces in Car Park 2 as fifteen minute parking spaces.

Councilwoman Tagger-Epstein explained that the Traffic and Pedestrian Safety Committee considered this issue and the shorter parking spot times will help the Business District and encourage an overturn of business through busy times of day.

Councilwoman Tagger-Epstein made a motion, seconded by Councilwoman Hurd, to amend local law Chapter 191, "Vehicles and Traffic", of the Rye City Code, Section §191-20, "Parking time limited", Subsection (E) "Fifteen-minute limit" to designate four parking spaces in Car Park 2 as fifteen minute parking spaces.

ROLL CALL
AYES: Mayor Sack, Councilmembers Bucci, Hurd, Killian, McCartney, Mecca and Tagger-Epstein
NAYS: None
ABSENT: None

14. Two appointments to the Boat Basin Commission, by the Council, to fill terms expiring on January 1, 2017.

Councilwoman Hurd explained that the Boat Basin Commission met and discussed several applicants who wished to fill open positions created by recent bylaw amendments. Brendan Doyle, Rye resident, and Stephen Monaldo, nonresident, have been recommended to the Council by the Commission. Councilwoman Hurd and Assistant City Manager Militana explained that the bylaws procedure requires a nomination from the committee with Council approval.

Councilwoman Hurd made a motion, seconded by Councilman McCartney and unanimously carried, to approve that Brendan Doyle and Stephen Monaldo fill the two vacant positions on the Boat Basin Commission, with terms expiring January 1, 2017.

15. One appointment to the Conservation Commission Advisory Council for a three-year term, by the Mayor with Council approval.

Mayor Sack appointed Jay Archer to the Conservation Commission Advisory Council for a three-year term expiring January 1, 2019, which was unanimously approved by the Council.

16. One appointment to the Landmarks Advisory Committee for a three-year term, by the Mayor with Council approval.

Mayor Sack appointed Margot Clark-Junkins to the Landmarks Advisory Committee for a three year term, expiring January, 2019, which was unanimously approved by the Council.

17. Resolution to declare certain City of Rye equipment as surplus.

Assistant City Manager Militana stated that four City departments had recently cleaned out old equipment that had become obsolete. There was some general discussion, with an understanding that the City would sell any items that could be sold.

Councilman Mecca made a motion, seconded by Councilwoman Tagger-Epstein and unanimously carried, to approve Resolution 2016-20, declaring certain City of Rye equipment as surplus.

ROLL CALL
AYES: Mayor Sack, Councilmembers Bucci, Hurd, Killian, McCartney, Mecca and Tagger-Epstein
NAYS: None
ABSENT: None

18. Miscellaneous communications and reports.

Mayor Sack announced that the Rye Town Park Commission was holding a special personnel meeting on May 1, 2016 to interview candidates for the Director role. This will be a closed meeting due to personnel issues. There will be a general Rye Town Park information session held on May 14, 2016 at 10:00 A.M.

Councilwoman Hurd praised Police Commissioner Corcoran for his efforts with individuals within the community who are in need of help during emergencies. She generally discussed generally emergency teams and the City's Emergency Preparedness Plan, which is currently being rewritten.

The Council discussed the Master Plan update. Mayor Sack stated that the subcommittee would be meeting to discuss next steps and the potential use of a survey to gauge priorities among residents.

Councilwoman Hurd stated there had been some discussion about the School Board having a spot on the master plan committee as well as Substantiality or environmental conservation. Mayor Sack responded that he and the committee are open to all input from everyone, but the makeup of the committee itself will remain the same.

19. New Business.

There was nothing discussed under this agenda item.

20. Adjournment.

There being no further business to discuss, Councilman Mecca made a motion, seconded by Councilman McCartney, to adjourn the regular meeting at 8:40 P.M.

Respectfully submitted,

Carolyn E. D'Andrea
City Clerk

CITY COUNCIL AGENDA

NO. 6 DEPT.: City Council DATE: May 11, 2016

CONTACT: Mayor Joseph A. Sack

AGENDA ITEM: Issues Update/Old Business

FOR THE MEETING OF:
May 11, 2016

RYE CITY CODE,
CHAPTER
SECTION

RECOMMENDATION: That an update be provided on outstanding issues or Old Business.

IMPACT: ☐ Environmental ☐ Fiscal ☐ Neighborhood ☐ Other:

BACKGROUND:

CITY COUNCIL AGENDA

NO. 7 DEPT.: Corporation Counsel DATE: May 11, 2016

CONTACT: Kristen K. Wilson, Esq., Corporation Counsel

AGENDA ITEM: Authorization for City Manager to sign the proposed amendment to the existing License Agreement for 88 Davis LLC.

FOR THE MEETING OF:
May 11, 2016

RYE CITY CODE,
CHAPTER
SECTION

RECOMMENDATION: That the City Council review the proposed amendment to the existing License Agreement for 88 Davis LLC and provide authorization to the City Manager to sign.

IMPACT: ☐ Environmental ☐ Fiscal ☐ Neighborhood ☒ Other:

BACKGROUND: The City entered into a License Agreement with the former owners of 88 Davis Avenue on April 19, 2000 which allowed the owners to maintain a wall and landscaping within the City right-of-way at the end of Davis Avenue. The current owners of 88 Davis Avenue are requesting a modification to this License Agreement to allow the maintenance of additional landscaping and a fence within the Davis Avenue right-of-way until such time as the property is redeveloped.

See attached:

- Letter from Petitioner
- Proposed Amended License Agreement
- Original License Agreement

HKP | HARFENIST KRAUT & PERLSTEIN LLP

LEO NAPIOR

DIRECT TEL.: 914-701-0800
MAIN FAX: 914-701-0808
LNAPIOR@HKPLAW.COM

May 5, 2016
VIA HAND DELIVERY

Marcus Serrano
Rye City Manager
1051 Boston Post Road
Rye, New York 10580

Re: ***88 Davis Avenue – Amended License Agreement***

Dear Mr. Serrano:

We represent 88 Davis, LLC, the owner of 88 Davis Avenue (the "Subject Property"). Our client has recently removed the prior single family residence from the Subject Property and intends to keep the Subject Property vacant for the foreseeable future.

There was an existing License Agreement between the City and the former owners of the Subject Property, Grace Associates, LLC, dated April 19, 2000, which allowed the owners of the Subject Property to maintain a wall and landscaping within the City right-of-way at the end of Davis Avenue. Our client is seeking to modify the terms of that License Agreement to allow the maintenance of additional landscaping and a fence within the Davis Avenue right-of-way until such time as the Subject Property is redeveloped.

A copy of the existing License Agreement and the proposed Amended License Agreement are attached hereto. We respectfully request that this matter be placed on the City Council agenda for May 11, 2016.

Please contact the undersigned if you require any additional information concerning this matter.

Very Truly Yours,

HARFENIST KRAUT & PERLSTEIN LLP

By: _____
Leo Napior

CC: Christian Miller, Rye City Planner
Kristen Wilson, Corporation Counsel

AMENDED LICENSE AGREEMENT

THE AGREEMENT made the ___ day of _____, 2016, by and between the CITY OF RYE, a municipal corporation organized under the laws of the State of New York, with its principal place of business at Rye City Hall, 1051 Boston Post Road, Rye, New York (hereinafter referred to as the "FIRST PARTY") and 88 DAVIS, LLC, (hereinafter referred to as the "SECOND PARTY") owner of property located at 88 Davis Avenue, Rye, New York, also known on the current tax assessment map of the City of Rye as Sheet No. 146.11, Block 3, Lot 82 (hereinafter referred to as the "Property").

WITNESSETH

WHEREAS, there is an existing License Agreement between the FIRST PARTY and the SECOND PARTY, as the successor in interest to the Property of GRACE ASSOCIATES, LLC, dated April 19, 2000, allowing the SECOND PARTY to maintain a wall and landscaping in the right-of-way of Davis Avenue in front of the Property;

WHEREAS, the SECOND PARTY desires to maintain a lawn, landscaping, wall and/or fencing (hereinafter the "Improvements") within the Davis Avenue right-of-way in front of the Property; and

WHEREAS, the FIRST PARTY is willing to amend the prior license to permit the Improvements in the City right-of-way.

NOW, THEREFORE, in consideration of the payment of $10.00, receipt of which is acknowledged by the FIRST PARTY, and other consideration, the parties hereto agree as follows:

1. That the SECOND PARTY is hereby granted a license to place the Improvements in the right-of-way of Davis Avenue in front of the Property.

2. The SECOND PARTY, its successors, heirs or assigns, shall at all times be responsible for and have a license to maintain the Improvements within the City right-of-way.

3. The SECOND PARTY, its successors, heirs or assigns, shall indemnify and save harmless the FIRST PARTY and its employees, officers and agents, from all claims, suits and actions and all damages and costs to which they may be put by reason of death or injury to all persons or property of another resulting from unskillfulness, willfulness, negligence or carelessness in the installation and maintenance of the Improvements. The SECOND PARTY will maintain liability insurance issued by an insurance company licensed to do business in the State of New York in form and amount deemed sufficient by the City Attorney and shall provide a certificate of insurance evidencing the same and which shall provide thirty days notice of cancellation of the same to the City. Said policy of insurance and certificate shall name the City of Rye as additional insured.

4. The entire cost of constructing and maintaining the Improvements shall be the sole responsibility of the SECOND PARTY, and the FIRST PARTY shall have no financial obligation therein.

5. The SECOND PARTY agrees that if the SECOND PARTY, its successors, heirs or assigns, shall at any time proceed to develop the Property with a new residence, upon request by the FIRST PARTY the SECOND PARTY shall remove the Improvements and restore the disturbed areas within the Davis Avenue right-of-way to their prior condition or as reasonably directed by the FIRST PARTY to provide an appropriate turnaround, and such removal and restoration shall be at the expense of the SECOND PARTY, its successors, heirs or assigns.

6. This Agreement shall inure to the benefit of and be binding on the successors and assigns in interest of the SECOND PARTY, which covenant shall run with the land.

IN WITNESS WHEREOF, the parties to this Agreement have hereunto set their hands and seals the day and year first above written.

CITY OF RYE

By:_____
Marcus Serrano
City Manager

88 DAVIS, LLC

By:_____

STATE OF NEW YORK)
COUNTY OF WESTCHESTER) ss:

On _____, 2016, before me, the undersigned, personally appeared _____, personally known to me or proved to me on the basis of satisfactory evidence to be the individual whose name is subscribed to the within instrument and acknowledged to me that he executed the same in his capacity(ies), and that by his signature on the instrument, the individual, or the person or entity upon behalf of which the individual acted, executed the instrument.

_____
Notary Public

STATE OF NEW YORK)
COUNTY OF WESTCHESTER) ss:

On _____, 2016, before me, the undersigned, personally appeared _____, personally known to me or proved to me on the basis of satisfactory evidence to be the individual whose name is subscribed to the within instrument and acknowledged to me that he executed the same in his capacity(ies), and that by his signature on the instrument, the individual, or the person or entity upon behalf of which the individual acted, executed the instrument.

_____
Notary Public

LICENSE AGREEMENT

THE AGREEMENT made the 19th day of April, 2000, by and between the CITY OF RYE, a municipal corporation organized under the laws of the State of New York, with its principal place of business at Rye City Hall, 1051 Boston Post Road, Rye, New York (hereinafter referred to as the "FIRST PARTY") and GRACE ASSOCIATES, LLC, (hereinafter referred to as the "SECOND PARTY"), owner of property at 80 Davis Avenue, Rye, New York, also known of the current tax assessment map of the City of Rye as Sheet No. 146.11, Block 3, Lot 82 (hereinafter the "Property")

WITNESSETH

WHEREAS, the SECOND PARTY desires to maintain a wall and landscaping within the Davis Avenue City right-of-way in the area of the Property; and

WHEREAS, the FIRST PARTY is willing to grant a license to permit the wall and landscaping in the City right-of-way.

NOW, THEREFORE, in consideration of the payment of $10.00, receipt of which is acknowledged by the FIRST PARTY, and other consideration, the parties hereto agree as follows:

1. That the SECOND PARTY is hereby granted a license to place the wall and landscaping in the right-of-way of Davis Avenue in front of the Property.

2. The SECOND PARTY, its successors, heirs or assigns, shall at all times be responsible for and have a license to maintain the wall and landscaping within the City right-of-way.

3. The SECOND PARTY, its successors, heirs or assigns, shall indemnify and save harmless the FIRST PARTY and its employees, officers, and agents, from all claims, suits and actions and all damages and costs to which they may be put by reason of death or injury to all persons or property of another resulting from unskillfulness, willfulness, negligence or carelessness in the

installation and maintenance of the wall and landscaping. Licensee will maintain liability insurance issued by an insurance company licensed to do business in the State of New York in form and amount deemed sufficient by the City Attorney and shall provide a certificate of insurance evidencing the same and which shall provide thirty days notice of cancellation of the same to the City. Said policy of insurance and certificate shall name the City of Rye as additional named insured.

4. The entire cost of constructing and maintaining the wall and landscaping shall be the sole responsibility of the SECOND PARTY, and the FIRST PARTY shall have no financial obligation therein.

5. The SECOND PARTY agrees that if the adjacent neighbor to the Property shall at any time proceed to improve access from said neighbor's property to Davis Avenue, the SECOND PARTY, its successors, heirs or assigns, shall allow a twelve foot (12') opening in the wall for such access and shall restore the area as necessary, including to original grade, to allow for such connection to Davis Avenue, and such wall removal and restoration shall be at the expense of the SECOND PARTY, its successors, heirs or assigns, provided however, that nothing herein shall be construed to require the SECOND PARTY, its successors, heirs or assigns, to make any improvements to allow for such access beyond restoring the property to the condition it was in prior to construction of the wall and installation of landscaping.

6. If, within two (2) years from the date of this Agreement, it appears that the trees which have been planted by the SECOND PARTY in the portion of the right-of-way in which the grade has been modified with fill are not healthy or appear to be dying due to being planted in the fill, the FIRST PARTY shall give notice of such condition to the SECOND PARTY and the SECOND PARTY shall thereafter be required to remove the dead or dying trees and the fill so as to restore the area to its

original grade and shall replant trees at this original grade.

7. This Agreement shall inure to the benefit of and be binding on the successors and assigns in interest of the SECOND PARTY, which covenant shall run with the land.

IN WITNESS WHEREOF, the parties to this Agreement have hereunto set their hands and seals the day and year first above written.

CITY OF RYE

BY: _____
Christopher J. Bradbury
Interim City Manager

Grace Associates, LLC

By: _____
ROBERT C HOWARD
MANAGING MEMBER

STATE OF NEW YORK)
COUNTY OF WESTCHESTER) ss:

On April 18, 2000 before me, the undersigned, personally appeared ~~Christopher J. Bradbury,~~ Robert C. Howard personally known to me or proved to me on the basis of satisfactory evidence to be the individual whose name is subscribed to the within instrument and acknowledged to me that he executed the same in his capacity(ies), and that by his signature on the instrument, the individual, or the personal upon behalf of which the individual acted, executed the instrument.

LINDA B. WHITEHEAD
Notary Public, State of New York
No. 4890973
Qualified in Westchester County
Commission Expires April 6, 20 01

_____
Notary Public

STATE OF NEW YORK)
COUNTY OF WESTCHESTER) ss:

On April 19, 2000 before me, the undersigned, personally appeared CHRISTOPHER J. BRADBURY personally known to me or proved to me on the basis of satisfactory evidence to be the individual whose name is subscribed to the within instrument and acknowledged to me that he executed the same in his capacity(ies), and that by his signature on the instrument, the individual, or the personal upon behalf of which the individual acted, executed the instrument.

_____
Notary Public

DAWN F. NODARSE
NOTARY PUBLIC, ST. OF NY
Qual. City Cl #60-5069427
Commission Expires 11/25/2000

LICENSE AGREEMENT

GRACE ASSOCIATES, LLC
With
CITY OF RYE

Property Affected:

Davis Avenue, City of Rye

City of Rye
Sheet 146.11
Block 3
Lot 82

RECORD AND RETURN
City of Rye
1051 Boston Post Road
Rye, New York 10580

CITY COUNCIL AGENDA

NO. 7A DEPT.: Finance DATE: May 11, 2016

CONTACT: Joseph S. Fazzino, Deputy City Comptroller

AGENDA ITEM: Resolution to transfer $50,000 from the Contingent Account to the Building and Vehicle Fund, Recreation Thruway Fields Project for a feasibility review associated with an athletic facility development at the NYS Thruway property.

FOR THE MEETING OF:
May 11, 2016

RECOMMENDATION: That the City Council adopt the following resolution:

WHEREAS, City staff has determined that the amounts required for a feasibility review associated with an athletic facility development at the NYS Thruway property were not anticipated and were not provided for in the adopted 2016 budget, and;

WHEREAS, the General Fund Contingent Account has a balance of $350,000, now therefore be it;

RESOLVED, that the Deputy City Comptroller is authorized to transfer $50,000 from the General Fund Contingent Account to the Building and Vehicle Fund, Recreation Thruway Fields Project.

IMPACT: ☐ Environmental ☑ Fiscal ☐ Neighborhood ☐ Other:

BACKGROUND:

Use and status of the Contingent Account:

01/01/2016 Beginning balance	$350,000
05/11/2016 Transfer to B&V Fund, Recreation Thruway Fields Project	(50,000)
05/11/2016 Balance	$300,000

See attached proposal.

COMMITMENT & INTEGRITY DRIVE RESULTS

709 Westchester Avenue | Suite L2
White Plains, New York 10604
www.woodardcurran.com

T 800.807.4080
T 914.448.2266
F 914.448.0147

Via Electronic Mail

May 9, 2016

Marcus Serrano
City Manager
City of Rye
1051 Boston Post Road
Rye, New York 10580

Re: Thruway Property – Initial Site Feasibility Review

Dear Mr. Serrano:

We appreciate the opportunity to provide the City of Rye (the" City") with professional engineering consulting services related to performing an initial feasibility review associated with an athletic facility development at the Thruway Property on Boston Post Road. As the City is aware, Woodard & Curran is very familiar with the site, having previously supported the City with concept layouts for an athletic field proposed for the site a few years back.

We understand the City is interested in better understanding what the estimated site development costs would be for a proposed athletic facility at the Thruway property site. The site is approximately 10 acres. As we discussed, we propose to undertake field investigations to characterize the site and better understand site conditions, which will have a direct impact on the development costs. Based on our conversations the City is interested in an athletic facility that would include a multipurpose athletic field within a domed structure to the north of the property. In addition, the City is considering expanding this Feasibility Study to address the area to the south of the property, which may include a future fieldhouse built by nearby Rye Country Day School to accommodate their sports programming. In addition, the City is interested in giving consideration to related infrastructure such as access roads, parking areas, a comfort station with restrooms and an administration office space as well as a concession area for food (non – cooking ie. no stove etc).

With our dedicated sports and recreation engineering team, and our long and successful history of delivering premiere sports and recreation facilities to our clients throughout Westchester County and nationally, including past work assignments undertaken by Woodard & Curran to study existing fields throughout the City of Rye, we are in an ideal position to support the City with this assignment.

The list below identifies the key items and tasks that we feel are most important to be undertaken as part of the feasibility study at this time.

Information Gathering and Permitting Review

This task will focus on gathering existing information currently available for the Thruway Property. This would include a review of public databases, requests for information from the property owner, interviews with entities having jurisdiction, correspondence with utility providers, etc. We would also review environmental and site development permitting requirements relative to the proposed development. The level of effort associated with this task is dependent upon the level of information that is available. At this time, we estimate a cost of $4,500 to initiate this process and begin gathering information and review the permitting requirements for the Property.

Zoning Analysis

We will perform a zoning analysis for $5,000 to better define any constraints associated with the layout of the facility on the Thruway property. The findings will be included as part of our study report.

Site Survey

A complete sitewide survey will be required in order to understand existing site conditions and constraints, including but not limited to, property boundary, easements, topography, and site utilities. At this time, we assume that a complete and updated survey is available through the City. If this survey information does not exist, or does not exist in a form or level of detail necessary to advance planning and design development, we would estimate that additional survey and utility locating could cost about $15,000. We have not requested quotes at this time from surveyors.

Conceptual Layout

The preparation of a preliminary conceptual site layout is recommended to better scope the proposed field investigations. Having a more realistic layout for the desired proposed improvements in type and location allows for greater efficiency and cost effectiveness in laying out and completing the subsurface field investigations. Borings and test pit plans will focus on the proposed locations and depths of proposed structures and ground disturbance. The cost to complete a preliminary conceptual layout is estimated to be approximately $4,500. The conceptual layout will address the City's proposed indoor multi-purpose field and related infrastructure. At this time, the conceptual layout work does not include the fieldhouse layout.

Geotechnical Field Investigations

Preliminary field investigations are necessary to obtain a better understanding of the existing subsurface conditions associated with the Property. Field investigations would initially be focused on completing geotechnical and exploratory borings and test pits to determine depth to groundwater, depth to bedrock, classify soils, and support future design work. It is estimated that the initial field investigations cost would be $20,000. The cost of this task could increase if there is a desire to complete a geotechnical engineering report that would be necessary to support the design of all foundations and structures. The geotechnical report would identify the values for specific design parameters. The added cost for a geotechnical report may add approximately $12,500, depending upon the preferred scope of the development project, which we expect to better define together with the City at an initial kick-off meeting. There is no charge for the kick-off meeting. We are currently assuming that historical borings information is not available for the Property. If it is, we will reassess and determine if there is an opportunity for cost savings.

Should the City wish to expand the geotechnical evaluation to the southern portion of the site (proposed location of RCDS Fieldhouse), the additional geotechnical field investigations are estimated to cost an additional $10,000. The additional geotechnical analysis for the fieldhouse is $5,000. Therefore, the total additional cost for geotechnical investigations and analyses (labor and expenses) is $15,000.

Environmental Investigations

In addition to the field investigations noted above, it is prudent to complete at least an initial environmental review of the property, particularly a Phase I Environmental Site Assessment (ESA). We understand that a Phase I study will be completed by others. The cost of a Phase II ESA is dependent upon the results and findings of the Phase I ESA (in type and location). However, for the purposes of this preliminary

scope of work, we would plan to expand the services of the driller to support environmental investigations. We estimate an additional $5,000 allocation for the driller, an allocation of $10,000 for laboratory costs and $7,500 allocation in labor time. The total cost estimated for Environmental Investigations (including the Phase 1) is $22,500.

Should the City decide to expand the environmental investigations to address the proposed location of the fieldhouse, we estimate an additional $5,000 for the driller, $5,000 for laboratory costs and $5,000 in labor time. The total increase to address environmental conditions for the proposed fieldhouse location is $15,000, including labor and expenses.

Cost Estimating

A Preliminary Engineer's Opinion of Probable Construction Costs can be developed based on the preliminary concept layout, taking into account the results of the field investigations. This initial estimate of construction costs would help the City to plan around necessary funding, project phasing, etc. The estimated cost to perform this construction cost estimate is $1,750.

Summary of Estimated Costs

Task	Estimated Cost
Information Gathering and Permitting Review	**$4,500**
Zoning Analysis	**$5,000**
Site Survey (Allocation)	**$15,000**
Conceptual Layout	**$4,500**
Geotechnical Field Investigations[1] (Allocation)	**$20,000 - $32,500**
Environmental Investigations [2] (Allocation)	**$22,500**
Cost Estimating	**$1,750**

1. The estimated cost range is based upon the need or desire to complete a geotechnical engineering report in this initial phase of work. This does not include the added cost for geotechnical investigations and analyses for the fieldhouse, estimated to be an additional $15,000.

2. The cost for environmental investigations does not include the environmental work required for the fieldhouse, estimated to be an additional $15,000.

The City will only be billed for actual costs expended for the driller, laboratory and the excavator for test pits. Woodard & Curran proposes no markup on driller, excavator and lab subcontractor expenses.

Implementation Approach and Schedule

We propose to complete a feasibility report incorporating the findings from our proposed work efforts described above. We plan to discuss our approach further with the City at our initial kick-off meeting. Depending on the City's input and vision for the site, as well as the confirmation of available historical data, if necessary, we are prepared to revisit the approach and costs included herein. We are prepared to begin the proposed work upon notice to proceed and estimate that this work may be completed within two months. The need for a surveyor and their availability could potentially influence the proposed work period. Should the City require that this work be completed sooner, we propose to discuss scheduling and needs further at our initial kick-off meeting.

Should our proposal be acceptable to the City please acknowledge such below. We will then forward to the City separately Terms and Conditions for signature.

Thank you for the opportunity to continue to support the City with proposed plans for the Thruway Property. Please feel free to contact me with any questions or concerns by email or on my mobile phone at (914) 960-2836.

Sincerely,

WOODARD & CURRAN ENGINEERING P.A. P.C.

Anthony C. Catalano, PE, BCEE
Senior Principal

City Authorized Representative Approval (Signature) (Date)

CITY COUNCIL AGENDA

NO. 8 DEPT.: Corporation Counsel DATE: May 11, 2016

CONTACT: Kristen K. Wilson, Esq., Corporation Counsel

AGENDA ITEM: Consideration to set a Public Hearing for June 8, 2016 regarding the request submitted by Crown Castle to amend their agreement with the City and for the installation of additional locations to their existing wireless telecommunications located in the City of Rye.

FOR THE MEETING OF:
May 11, 2016

RYE CITY CODE,
CHAPTER
SECTION

RECOMMENDATION: That the Council set a Public Hearing regarding the request submitted by Crown Castle to amend their agreement with the City and for the installation of additional locations.

IMPACT: ☐ Environmental ☐ Fiscal ☒ Neighborhood ☐ Other:

BACKGROUND: The City Council approved an agreement with NextG Networks, Inc. at their January 12, 2011 City Council Meeting to conduct business as a telecommunications company operating with infrastructure located in the City's public ways. Crown Castle purchased NextG in December 2011. Crown Castle is seeking an amendment to the agreement with the City to change the language to "Con Edison approved shroud," as Con Edison is the local utility who owns most of the poles in the right-of-way in the City.

Crown Castle currently has nine (9) facilities in the City of Rye. They are seeking to add approximately seventy-three (73) additional locations within the City's right-of-way.

The City Council referred the application for additional locations to the Board of Architectural Review (BAR) at their April 13, 2016 meeting. The BAR approved the application at the May 9, 2016 BAR meeting.

See attached documentation from Crown Castle:

Regarding Requested Changes to the Agreement with the City of Rye

- Letter from Esme A. Lombard, Crown Castle National Real Estate – Contractor
- Existing Right-of-Way (RUA) Use Agreement with the City of Rye
- Amendment to Right-of-Way (RUA) Use Agreement
- State Level Regulatory Overview information

Regarding the Request for additional locations in the City of Rye

- Table of Proposed locations
- Map of Proposed locations
- Table of existing locations
- Photos of existing attachments in the City of Rye

Crown Castle
131-05 14th Avenue
College Point, NY 11356

VIA EMAIL AND US MAIL

April 8, 2016

Mayor Sack and Rye City Council
Rye City Hall
1051 Boston Post Road
Rye, New York 10580

RE: City of Rye Crown Castle Right of Way Use Agreement Amendment and Expansion Project

Dear Mayor Sack and Rye City Council:

I am Esmé Lombard for Crown Castle NG East LLC ("Crown Castle"). On Tuesday, March 15th, I and other members of the Crown Castle team, met with Corporation Counsel, Kristen Wilson, City Manager, Marcus Serrano, Assistant City Manager, Eleanor Militana and City Engineer, Ryan Coyne to: (a) initiate a minor amendment to an existing Right of Way Use Agreement ("RUA") that the City of Rye ("City") has had in place with Crown Castle since February 17, 2001; and (b) discuss Crown Castle's plans to expand its existing equipment in the City in the upcoming months.

As you may know, Crown Castle provides telecommunications services to its customers, specifically, radio frequency ("RF") transport services. It does so via telecommunications networks installed in the public rights-of-way ("Networks"), which integrates elements including fiber optic cables as well as personal wireless services facilities, such as antennas and related equipment (collectively, "Equipment"). Crown Castle's Networks are sometimes referred to as Small Cell Networks, or more specifically, Distributed Antenna Systems ("DAS").

Background: Existing RUA Between the City & Crown Castle

By way of background, the City and Crown Castle executed an RUA, dated February 17, 2011, that is still in effect. The term of the RUA is ten (10) years with three (3) successive terms of five (5) years.

The RUA enables Crown Castle to locate Equipment for its Networks on the existing incumbent infrastructure located within the public right-of-way for the purposes of a Distributed Antenna System for our clients – in this case Verizon Wireless.

For use of the public right-of-way the City receives five percent (5%) of Crown Castle's adjusted gross revenues

from services provided in the City for each Equipment location, regardless of the ownership of the infrastructure (utility poles are typically owned by the telephone or electric provider). In addition, Crown Castle compensates the City five hundred dollars ($500.00) annually for each City-owned pole upon which equipment is attached to, with annual increases. This is the same rate structure that Crown Castle has in place with other municipalities throughout the region.

Crown Castle is seeking a minor amendment to Exhibit A of the existing RUA. Exhibit A provides specs of the proposed Equipment. Throughout Exhibit A, certain Equipment is referred to as "DoITT approved shroud." Crown Castle would like to change the language throughout the RUA to "Con Edison approved shroud," as Con Edison is in fact the local utility who owns most of the poles in the right-of-way in the City. It should be noted that the Con Edison approved shroud is slightly larger than the DoITT approved shroud. However, it is the relevant shroud, as DoITT does not own or control any of the poles contemplated in the RUA, or, to my knowledge, any poles within the City.

The existing RUA, including the original Exhibit A, as well as the proposed draft amendment to Exhibit A, are enclosed for your review as Attachment 1. Photos of the existing Equipment types and a location map were provided in a package sent to you, dated April 1, 2016, enabling you to visit the subject sites prior to the April 13, 2016 Board Meeting.

Existing & Proposed Location of Crown Castle's Equipment

In addition to the existing nine (9) Equipment locations that have been operational in the City since February 2011, Crown Castle has been commissioned by our client to attach its Equipment to approximately seventy-three (73) additional locations within the City's right-of-way. All but two (2) of those locations are on existing wooden poles. Two (2) locations will require the placement of a new pole.

The existing RUA authorizes the installation and operation of Crown Castle's Equipment and Network in, under, and over the public ways of the City on standard-design prefabricated steel poles, wooden distribution poles, newly installed poles and other available structures throughout the City. Crown Castle has complied with and will continue to do so for the new installations with all relevant provisions of the City Code as such provisions are applied to the incumbent telecommunications provider (the "ILEC").

For the two (2) new poles that will be placed within the right-of-way the RUA covers this in Section 3.2, "Where third-party property is not available for attachment of Equipment, NextG (Crown) may install its own utility poles in the Public Way, consistent with the requirements that the City imposes on similar installations made by other utilities that use and occupy the Public Way."

A map identifying the location of the existing and proposed locations within the City is enclosed as Attachment 2.

Crown Castle's Public Utility Status

Pursuant to the laws of the State of New York, Crown Castle is a public utility and, as such, has been granted a Certificate of Public Convenience and Necessity ("CPCN") (Case No. 03-C-0027, April 4, 2003) by the Public Service Commission of the State of New York ("PSC"). [1] As a result, Crown Castle must be granted access to the public rights of way in the same manner and on the same terms applicable to other certificated telecommunications providers and utilities, as had been the case with the existing RUA.

A copy of Crown's CPCN granted by New York State is enclosed as Attachment 3.

Should you require any additional information prior to the April 13th meeting, please do not hesitate to reach out to me at 914-935-1235 or via email – Esme.Lombard@crowncastle.com. We look forward to presenting this project to you on the 13th and answering any questions you may have.

Kind Regards,

Esmé Lombard

Esmé A. Lombard
National Real Estate – Contractor
Crown Castle

Cc: City Manager – Marcus Serrano
Assistant City Manager – Eleanor Militana
City Attorney – Kristen Wilson
City Engineer – Ryan Coyne
Peter Heimdahl – Regional Director, Government Relations, Crown Castle
Eli Elbaum – Government Relations Council, Crown Castle
John Cavaliere – Government Relations Manager, Crown Castle
Joseph Klem – Government Relations Specialist, Crown Castle

RIGHT-OF-WAY USE AGREEMENT

THIS RIGHT-OF-WAY USE AGREEMENT (this "Use Agreement") is dated as of February 17, 2011 (the "Effective Date"), and entered into by and between the CITY OF RYE, a New York municipal corporation (the "City"), and NEXTG NETWORKS OF NY, INC. a Delaware corporation ("NextG").

RECITALS

A. NextG owns, maintains, operates and controls, in accordance with regulations promulgated by the Federal Communications Commission and the New York State Public Service Commission, a fiber-based telecommunications Network or Networks (as defined below) serving NextG's wireless carrier customers and utilizing microcellular optical repeater Equipment (as defined below) certified by the Federal Communications Commission.

B. For purpose of operating the Network, NextG wishes to locate, place, attach, install, operate, control, and maintain Equipment in the Public Way (as defined below) on facilities owned by the City, as well as on facilities owned by third parties therein.

AGREEMENT

NOW, THEREFORE, for good and valuable consideration, the receipt and sufficiency of which are hereby acknowledged, the parties agree to the following covenants, terms, and conditions:

1 DEFINITIONS. The following definitions shall apply generally to the provisions of this Use Agreement:

1.1 *City.* ("City") shall mean the City of Rye, New York.

1.2 *Decorative Streetlight Pole.* "Decorative Streetlight Pole" shall mean any streetlight pole that incorporates artistic design elements not typically found in standard steel or aluminum streetlight poles.

1.3 *Equipment.* "Equipment" means the optical repeaters, DWDM and CWDM multiplexers, antennas, fiber optic cables, wires, and related equipment, whether referred to singly or collectively, to be installed and operated by NextG hereunder. Examples of typical Equipment types and installation configurations are shown in the drawings and photographs attached hereto as **Exhibit A** and incorporated herein by reference.

1.4 *Fee.* "Fee" means any assessment, license, charge, fee, imposition, tax, or levy of general application to entities doing business in the City lawfully imposed by any governmental body (but excluding any utility users' tax, franchise fees, communications tax, or similar tax or fee).

1.5 *Gross Revenue.* "Gross Revenue" shall mean and include any and all income and other consideration collected, received, or in any manner gained or derived by NextG from or in connection with, the provision of RF telecommunication transport services, either directly by NextG or indirectly through a reseller, if any, to customers of such services wholly consummated within the

City, including any imputed revenue derived from commercial trades and barters equivalent to the full retail value of goods and services provided by NextG. "Adjusted Gross Revenue" shall include offset for: (a) sales, ad valorem, or other types of "add-on" taxes, levies, or fees calculated by gross receipts or gross revenues which might have to be paid to or collected for federal, state, or local government (exclusive of the Municipal Facilities Annual Fee paid to the City provided herein); (b) retail discounts or other promotions; (c) non-collectable amounts due NextG or its customers; (d) refunds or rebates; and (e) non-operating revenues such as interest income or gain from the sale of an asset.

1.6 *ILEC.* "ILEC" means the Incumbent Local Exchange Carrier that provides basic telephone services, among other telecommunications services, to the residents of the City.

1.7 *Installation Date.* "Installation Date" shall mean the date that the first Equipment is installed by NextG pursuant to this Use Agreement.

1.8 *Laws.* "Laws" means any and all statutes, constitutions, ordinances, resolutions, regulations, judicial decisions, rules, tariffs, administrative orders, certificates, orders, or other requirements of the City or other governmental agency having joint or several jurisdiction over the parties to this Use Agreement.

1.9 *Municipal Facilities.* "Municipal Facilities" means City-owned Streetlight Poles, Decorative Streetlight Poles, lighting fixtures, electroliers, or other City-owned structures located within the Public Way and may refer to such facilities in the singular or plural, as appropriate to the context in which used.

1.10*Network.* "Network" or collectively "Networks" means one or more of the neutral-host, protocol-agnostic, fiber-based optical repeater networks operated by NextG to serve its wireless carrier customers in the City.

1.11 *NextG.* "NextG" means NextG Networks of NY, Inc., a corporation duly organized and existing under the laws of the State of Delaware, and its lawful successors, assigns, and transferees.

1.12 *Public Way.* "Public Way" means the space in, upon, above, along, across, and over the public streets, roads, highways, lanes, courts, ways, alleys, boulevards, sidewalks, bicycle lanes, and places, including all public utility easements and public service easements as the same now or may hereafter exist, that are under the jurisdiction of the City. This term shall not include county, state, or federal rights of way or any property owned by any person or entity other than the City, except as provided by applicable Laws or pursuant to an agreement between the City and any such person or entity.

1.13 *PSC.* " PSC" means the New York State Public Service Commission.

1.14 *Services.* "Services" means the RF transport and other telecommunications services provided through the Network by NextG to its wireless carrier customers pursuant to one or more tariffs filed with and regulated by the PSC.

1.15 *Streetlight Pole.* "Streetlight Pole" shall mean any standard-design concrete, fiberglass, metal, or wooden pole used for streetlighting purposes.

2 TERM. This Use Agreement shall be effective as of the Effective Date and shall extend for a term of ten (10) years commencing on the Installation Date, unless it is earlier terminated by either party in accordance with the provisions herein. The term of this Use Agreement shall be renewed automatically

for three (3) successive terms of five (5) years each on the same terms and conditions as set forth herein, unless NextG notifies the City of its intention not to renew not less than thirty (30) calendar days prior to commencement of the relevant renewal term.

3 SCOPE OF USE AGREEMENT. Any and all rights expressly granted to NextG under this Use Agreement, which shall be exercised at NextG's sole cost and expense, shall be subject to the prior and continuing right of the City under applicable Laws to use any and all parts of the Public Way exclusively or concurrently with any other person or entity and shall be further subject to all deeds, easements, dedications, conditions, covenants, restrictions, encumbrances, and claims of title of record which may affect the Public Way. Nothing in this Use Agreement shall be deemed to grant, convey, create, or vest in NextG a real property interest in land, including any fee, leasehold interest, or easement. Any work performed pursuant to the rights granted under this Use Agreement shall be subject to the reasonable prior review and approval of the City except that it is agreed that no zoning or planning board permit, variance, conditional use permit or site plan permit, or the equivalent under the City's ordinances, codes or laws, shall be required for the installation of NextG's Equipment installed in the Public Way and/or on Municipal Facilities, unless such a process has been required for the placement of all communications facilities and equipment in the Public Way by all other telecommunications providers, including but not limited to the ILEC and local cable provider(s).

3.1 *Attachment to Municipal Facilities.* The City hereby authorizes and permits NextG to enter upon the Public Way and to locate, place, attach, install, operate, maintain, control, remove, reattach, reinstall, relocate, and replace Equipment in or on Municipal Facilities for the purposes of operating the Network and providing Services. In addition, subject to the provisions of § 4.5 below, NextG shall have the right to draw electricity for the operation of the Equipment from the power source associated with each such attachment to Municipal Facilities. A denial of an application for the attachment of Equipment to Municipal Facilities shall not be based upon the size, quantity, shape, color, weight, configuration, or other physical properties of NextG's Equipment if the Equipment proposed for such application substantially conforms to one of the approved configurations and the Equipment specifications set forth in Exhibit A.

3.2 *Attachment to Third-Party Property.* Subject to obtaining the permission of the owner(s) of the affected property, the City hereby authorizes and permits NextG to enter upon the Public Way and to attach, install, operate, maintain, remove, reattach, reinstall, relocate, and replace such number of Equipment in or on poles or other structures owned by public utility companies or other property owners located within the Public Way as may be permitted by the public utility company or property owner, as the case may be. Upon request, NextG shall furnish to the City evidence that NextG has entered into the appropriate pole-attachment agreement required pursuant to N.Y. C.L.S. Pub. Ser. § 119-a. A denial of an application for the attachment of Equipment to third-party-owned poles or structures in the Public Way shall not be based upon the size, quantity, shape, color, weight, configuration, or other physical properties of NextG's Equipment if the Equipment proposed for such application substantially conforms to one of the approved configurations and the Equipment specifications set forth in Exhibit A. Where third-party property is not available for attachment of Equipment, NextG may install its own utility poles in the Public Way, consistent with the requirements that the City imposes on similar installations made by other utilities that use and occupy the Public Way.

3.3 *Preference for Municipal Facilities.* In any situation where NextG has a choice of attaching its Equipment to either Municipal Facilities or third-party-owned property in the Public Way, NextG agrees to attach to the Municipal Facilities, provided that (i) such Municipal Facilities are at least equally suitable functionally for the operation of the Network and (ii) the rental fee and installation

costs associated with such attachment over the length of the term are equal to or less than the fee or cost to NextG of attaching to the alternative third-party-owned property.

3.4 *No Interference.* NextG in the performance and exercise of its rights and obligations under this Use Agreement shall not interfere in any manner with the existence and operation of any and all public and private rights of way, sanitary sewers, water mains, storm drains, gas mains, poles, aerial and underground electrical and telephone wires, electroliers, cable television, and other telecommunications, utility, or municipal property, without the express written approval of the owner or owners of the affected property or properties, except as permitted by applicable Laws or this Use Agreement. The City agrees to require the inclusion of the same or a similar prohibition on interference as that stated above in all agreements and franchises the City may enter into after the Effective Date with other information or communications providers and carriers.

3.5 *Compliance with Laws.* NextG shall comply with all applicable Laws in the exercise and performance of its rights and obligations under this Use Agreement.

4 COMPENSATION; UTILITY CHARGES. NextG shall be solely responsible for the payment of all lawful Fees in connection with NextG's performance under this Use Agreement, including those set forth below.

4.1 *Annual Fee.* In order to compensate the City for NextG's entry upon and deployment within the Public Way and as compensation for the use of Municipal Facilities, NextG shall pay to the City an annual fee (the "Annual Fee") in the amount of Five Hundred Dollars ($500.00) for the use of each Municipal Facility, if any, upon which a Equipment has been installed pursuant to this Use Agreement. The aggregate Annual Fee with respect to each year of the term shall be an amount equal to the number of Equipment installed on Municipal Facilities during the preceding twelve (12) months multiplied by the Annual Fee, prorated as appropriate, and shall be due and payable not later than forty-five (45) days after each anniversary of the Installation Date. The City represents and covenants that the City owns all Municipal Facilities for the use of which it is collecting from NextG the Annual Fee pursuant to this § 4.1.

4.1.1 *CPI Adjustment.* Effective commencing on the fifth (5th) anniversary of the Installation Date and continuing on each fifth (5th) anniversary thereafter during the term, the Annual Fee with respect to the ensuing five-year period shall be adjusted by a percentage amount equal to the percentage change in the U.S. Department of Labor, Bureau of Labor Statistics Consumer Price Index (All Items, All Urban Consumers, 1982-1984=100) which occurred during the previous five-year period for the New York-Northern New Jersey-Long Island, NY-NJ-PA Metropolitan Statistical Area (MSA).

4.2 *Right-of-Way Use Fee.* In order to compensate the City for NextG's entry upon and deployment of Equipment within the Public Way, NextG shall pay to the City, on an annual basis, an amount equal to five percent (5%) of Adjusted Gross Revenues (the "Right-of-Way Fee") payable within thirty (30) days of the Effective Date and on each anniversary thereafter. The Right-of-Way Fee shall be payable for the period commencing with the Effective Date and ending on the date of termination of this Use Agreement. NextG shall make any payment of the Right-of-Way Fee that may be due and owing within forty-five (45) days after the first anniversary of the Effective Date and within the same period after each subsequent anniversary of the Effective Date. Within forty-five (45) days after the termination of this Use Agreement, the Right-of-Way Fee shall be paid for the period elapsing since the end of the last calendar year for which the Right-of-Way Fee has been paid. NextG shall furnish to the City with each payment of the Right-of-Way Fee a statement, executed by an authorized officer of NextG or his or her designee, showing the amount of Adjusted Gross Revenues for the

period covered by the payment. If NextG discovers any error in the amount of compensation due, the City shall be paid within thirty (30) days of discovery of the error or determination of the correct amount. Any overpayment to the City through error or otherwise shall be refunded or offset against the next payment due. Acceptance by the City of any payment of the Right-of-Way Fee shall not be deemed to be a waiver by the City of any breach of this Use Agreement occurring prior thereto, nor shall the acceptance by the City of any such payments preclude the City from later establishing that a larger amount was actually due or from collecting any balance due to the City.

4.3 *Accounting Matters.* NextG shall keep accurate books of account at its principal office in San Jose, CA or such other location of its choosing for the purpose of determining the amounts due to the City under §§ 4.1 and 4.2 above. The City may inspect NextG's books of account relative to the City at any time during regular business hours on thirty (30) days' prior written notice and may audit the books from time to time at the City's sole expense, but in each case only to the extent necessary to confirm the accuracy of payments due under § 4.1 above. The City agrees to hold in confidence any non-public information it learns from NextG to the fullest extent permitted by Law.

4.4 *Most-Favored Municipality.* Should NextG after the parties' execution and delivery of this Agreement enter into an attachment or franchise agreement with another municipality of the same size or smaller than the City in the same County (excluding New York City), which agreement contains financial benefits for such municipality which, taken as a whole and balanced with the other terms of such agreement, are in the City's opinion substantially superior to those in this Agreement, the City shall have the right to require that NextG modify this Use Agreement to incorporate the same or substantially similar superior benefits and such other terms and burdens by substitution, *mutatis mutandis*, of such other agreement or otherwise.

4.5 *Electricity Charges.* NextG shall be solely responsible for the payment of all electrical utility charges to the applicable utility company based upon the Equipment' usage of electricity and applicable tariffs.

5 CONSTRUCTION. NextG shall comply with all applicable federal, State, and City codes, specifications, and requirements, if any, related to the construction, installation, operation, maintenance, and control of NextG's Equipment installed in the Public Way and on Municipal Facilities in the City. NextG shall not attach, install, maintain, or operate any Equipment in or on the Public Way and/or on Municipal Facilities without the prior approval of the City for each location.

5.1 *Obtaining Required Permits.* If the attachment, installation, operation, maintenance, or location of the Equipment in the Public Way shall require any permits, NextG shall, if required under applicable City ordinances, apply for the appropriate permits and pay any standard and customary permit fees, so long as the permit fees and process that the City requests of NextG are functionally equivalent to the fees and the process that are applied to the ILEC and/or the cable provider(s). In the case of Third Party attachments (to existing utility infrastructure), NextG agrees to provide the City with a list of proposed attachments in advance of its deployment to the City and, the City agrees to use reasonable efforts to review and approve NextG's list of proposed attachments to Third Party utility infrastructure within thirty (30) days of submission, and if no comment is received within thirty (30) days, the application will be presumed to be acceptable and no further action will be required prior to NextG's installation.

5.2 *Location of Equipment.* The proposed locations of NextG's planned initial installation of Equipment shall be provided to the City promptly after NextG's review of available street light maps (if applicable) and prior to deployment of the Equipment. Upon the completion of installation,

NextG promptly shall furnish to the City a pole list showing the exact location of the Equipment in the Public Way.

5.3 *Relocation and Displacement of Equipment.* NextG understands and acknowledges that the City may require NextG to relocate one or more of its Equipment installations. NextG shall at City's direction relocate such Equipment at NextG's sole cost and expense, whenever the City reasonably determines that the relocation is needed for any of the following purposes: (a) if required for the construction, completion, repair, relocation, or maintenance of a City project; (b) because the Equipment is interfering with or adversely affecting proper operation of City-owned light poles, traffic signals, or other Municipal Facilities; or (c) to protect or preserve the public health or safety. In any such case, the City shall use its best efforts to afford NextG a reasonably equivalent alternate location. If NextG shall fail to relocate any Equipment as requested by the City within a reasonable time under the circumstances in accordance with the foregoing provision, the City shall be entitled to relocate the Equipment at NextG's sole cost and expense, without further notice to NextG. To the extent the City has actual knowledge thereof, the City will attempt promptly to inform NextG of the displacement or removal of any pole on which any Equipment is located.

5.4 *Relocations at NextG's Request.* In the event NextG desires to relocate any Equipment from one Municipal Facility to another, NextG shall so advise the City. The City will use its best efforts to accommodate NextG by making another reasonably equivalent Municipal Facility available for use in accordance with and subject to the terms and conditions of this Use Agreement.

5.5 *Damage to Public Way.* Whenever the removal or relocation of Equipment is required or permitted under this Use Agreement, and such removal or relocation shall cause the Public Way to be damaged, NextG, at its sole cost and expense, shall promptly repair and return the Public Way in which the Equipment are located to a safe and satisfactory condition in accordance with applicable Laws, normal wear and tear excepted. If NextG does not repair the site as just described, then the City shall have the option, upon fifteen (15) days' prior written notice to NextG, to perform or cause to be performed such reasonable and necessary work on behalf of NextG and to charge NextG for the proposed costs to be incurred or the actual costs incurred by the City at the City's standard rates. Upon the receipt of a demand for payment by the City, NextG shall promptly reimburse the City for such costs.

6 INDEMNIFICATION AND WAIVER. NextG agrees to indemnify, defend, protect, and hold harmless the City, its council members, officers, and employees from and against any and all claims, demands, losses, damages, liabilities, fines, charges, penalties, administrative and judicial proceedings and orders, judgments, and all costs and expenses incurred in connection therewith, including reasonable attorney's fees and costs of defense (collectively, the "Losses") directly or proximately resulting from NextG's activities undertaken pursuant to this Use Agreement, except to the extent arising from or caused by the negligence or willful misconduct of the City, its council or board members, officers, elected trustees, employees, agents, or contractors.

6.1 *Waiver of Claims.* NextG waives any and all claims, demands, causes of action, and rights it may assert against the City on account of any loss, damage, or injury to any Equipment or any loss or degradation of the Services as a result of any event or occurrence which is beyond the reasonable control of the City.

6.2 *Limitation of City's Liability.* The City shall be liable only for the cost of repair to damaged Equipment arising from the negligence or willful misconduct of the City, its employees, agents, or contractors and shall in no event be liable to indirect or consequential damages.

7 INSURANCE. NextG shall obtain and maintain at all times during the term of this Use Agreement Commercial General Liability insurance and Commercial Automobile Liability insurance protecting NextG in an amount not less than One Million Dollars ($1,000,000) per occurrence (combined single limit), including bodily injury and property damage, and in an amount not less than Two Million Dollars ($2,000,000) annual aggregate for each personal injury liability and products-completed operations. The Commercial General Liability insurance policy shall name the City, its elected officials, officers, and employees as additional insureds as respects any covered liability arising out of NextG's performance of work under this Use Agreement. Coverage shall be in an occurrence form and in accordance with the limits and provisions specified herein. Claims-made policies are not acceptable. Such insurance shall not be canceled, nor shall the occurrence or aggregate limits set forth above be reduced, until the City has received at least thirty (30) days' advance written notice of such cancellation or change. NextG shall be responsible for notifying the City of such change or cancellation.

7.1 *Filing of Certificates and Endorsements.* Prior to the commencement of any work pursuant to this Use Agreement, NextG shall file with the City the required original certificate(s) of insurance with endorsements, which shall state the following:

(a) the policy number; name of insurance company; name and address of the agent or authorized representative; name and address of insured; project name; policy expiration date; and specific coverage amounts;

(b) that the City shall receive thirty (30) days' prior notice of cancellation;

(c) that NextG's Commercial General Liability insurance policy is primary as respects any other valid or collectible insurance that the City may possess, including any self-insured retentions the City may have; and any other insurance the City does possess shall be considered excess insurance only and shall not be required to contribute with this insurance; and

(d) that NextG's Commercial General Liability insurance policy waives any right of recovery the insurance company may have against the City.

The certificate(s) of insurance with endorsements and notices shall be mailed to the City at the address specified in § 8 below.

7.2 *Workers' Compensation Insurance.* NextG shall obtain and maintain at all times during the term of this Use Agreement statutory workers' compensation and employer's liability insurance in an amount not less than One Million Dollars ($1,000,000) and shall furnish the City with a certificate showing proof of such coverage.

7.3 *Insurer Criteria.* Any insurance provider of NextG shall be admitted and authorized to do business in the State of New York and shall carry a minimum rating assigned by *A.M. Best & Company's Key Rating Guide* of "A" Overall and a Financial Size Category of "X" (*i.e.*, a size of $500,000,000 to $750,000,000 based on capital, surplus, and conditional reserves). Insurance policies and certificates issued by non-admitted insurance companies are not acceptable.

7.4 *Severability of Interest.* Any deductibles or self-insured retentions must be stated on the certificate(s) of insurance, which shall be sent to and approved by the City. "Severability of interest" or "separation of insureds" clauses shall be made a part of the Commercial General Liability and Commercial Automobile Liability policies.

8 NOTICES. All notices which shall or may be given pursuant to this Use Agreement shall be in writing and delivered personally or transmitted (a) through the United States mail, by registered or certified mail, postage prepaid; (b) by means of prepaid overnight delivery service; or (c) by facsimile or email transmission, if a hard copy of the same is followed by delivery through the U. S. mail or by overnight delivery service as just described, addressed as follows:

if to the City:

CITY OF RYE
Attn: Mayor
Rye City Hall
1051 Boston Post Road
Rye, New York 10580

if to NextG:

NEXTG NETWORKS OF NY, INC.
Attn: Contracts Administration
890 Tasman Drive
Milpitas, CA 95035-7439

8.1 *Date of Notices; Changing Notice Address.* Notices shall be deemed given upon receipt in the case of personal delivery, three (3) days after deposit in the mail, or the next business day in the case of facsimile, email, or overnight delivery. Either party may from time to time designate any other address for this purpose by written notice to the other party delivered in the manner set forth above.

9 TERMINATION. This Use Agreement may be terminated by either party upon forty five (45) days' prior written notice to the other party upon a default of any material covenant or term hereof by the other party, which default is not cured within forty-five (45) days of receipt of written notice of default (or, if such default is not curable within forty-five (45) days, if the defaulting party fails to commence such cure within forty-five (45) days or fails thereafter diligently to prosecute such cure to completion), provided that the grace period for any monetary default shall be ten (10) days from receipt of notice. Except as expressly provided herein, the rights granted under this Use Agreement are irrevocable during the term.

10 ASSIGNMENT. This Use Agreement shall not be assigned by NextG without the express written consent of the City, which consent shall not be unreasonably withheld, conditioned, or delayed. Notwithstanding the foregoing, the transfer of the rights and obligations of NextG to a parent, subsidiary, or other affiliate of NextG or to any successor in interest or entity acquiring fifty-one percent (51%) or more of NextG's stock or assets (collectively "Exempted Transfers") shall not be deemed an assignment for the purposes of this Agreement and therefore shall not require the consent of the City, provided that NextG reasonably demonstrates to the City's lawfully empowered designee the following criteria (collectively the "Exempted Transfer Criteria"): (i) such transferee will have a financial strength after the proposed transfer at least equal to that of NextG immediately prior to the transfer; (ii) any such transferee assumes all of NextG's obligations hereunder; and (iii) the experience and technical qualifications of the proposed transferee, either alone or together with NextG's management team, in the provision of telecommunications or similar services, evidences an ability to operate the NextG Network. NextG shall give at least thirty (30) days' prior written notice (the "Exempted Transfer Notice") to the City of any such proposed Exempted Transfer and shall set forth with specificity in such Exempted Transfer Notice the reasons why NextG believes the Exempted Transfer Criteria have been satisfied. The City Council of City shall have a period of thirty (30) days (the "Exempted Transfer Evaluation Period") from the date that

NextG gives the City its Exempted Transfer Notice to object in writing to the adequacy of the evidence contained therein. Notwithstanding the foregoing, the Exempted Transfer Evaluation Period shall not be deemed to have commenced until the City has received from NextG any and all additional information the City may reasonably require in connection with its evaluation of the Exempted Transfer Criteria as set forth in the Exempted Transfer Notice, so long as the City gives NextG notice in writing of the additional information the City requires within fifteen (15) days after the City's receipt of the original Exempted Transfer Notice. If the Council of the City fails to act upon NextG's Exempted Transfer Notice within the Exempted Transfer Evaluation Period (as the same may be extended in accordance with the foregoing provisions), such failure shall be deemed an affirmation by the City Council that NextG has in fact established compliance with the Exempted Transfer Criteria to the City's satisfaction.

11 MISCELLANEOUS PROVISIONS. The provisions which follow shall apply generally to the obligations of the parties under this Use Agreement.

11.1 *Environmental Review.* NextG's facilities are "unlisted" but functionally equivalent to Type II actions under 6 N.Y.C.R.R. 617.5(c)(11). NextG agrees to comply with any rules pertaining to State Environmental Quality Review and to submit any required environmental forms for the City's review and approval, so long as the review that the City requires is the same that the City requires of all other telecommunications providers, including but not limited to the ILEC and the cable provider(s), for their installation of any facilities or equipment in the Public Way.

11.2 *Nonexclusive Use.* NextG understands that this Use Agreement does not provide NextG with exclusive use of the Public Way or any Municipal Facility and that the City shall have the right to permit other providers of communications services to install equipment or devices in the Public Way and on Municipal Facilities. The City agrees promptly to notify NextG of the receipt of a proposal for the installation of communications equipment or devices in the Public Way or on Municipal Facilities. In addition, the City agrees to advise other providers of communications services of the presence or planned deployment of the Equipment in the Public Way and/or on Municipal Facilities.

11.3 *Waiver of Breach.* The waiver by either party of any breach or violation of any provision of this Use Agreement shall not be deemed to be a waiver or a continuing waiver of any subsequent breach or violation of the same or any other provision of this Use Agreement.

11.4 *Severability of Provisions.* If any one or more of the provisions of this Use Agreement shall be held by court of competent jurisdiction in a final judicial action to be void, voidable, or unenforceable, such provision(s) shall be deemed severable from the remaining provisions of this Use Agreement and shall not affect the legality, validity, or constitutionality of the remaining portions of this Use Agreement. Each party hereby declares that it would have entered into this Use Agreement and each provision hereof regardless of whether any one or more provisions may be declared illegal, invalid, or unconstitutional.

11.5 *Contacting NextG.* NextG shall be available to the staff employees of any City department having jurisdiction over NextG's activities twenty-four (24) hours a day, seven (7) days a week, regarding problems or complaints resulting from the attachment, installation, operation, maintenance, or removal of the Equipment. The City may contact by telephone the network control center operator at telephone number 1-866-44-NEXTG (446-3984) regarding such problems or complaints.

11.6 *Governing Law; Jurisdiction.* This Use Agreement shall be governed and construed by and in accordance with the laws of the State of New York, without reference to its conflicts of law

principles. If suit is brought by a party to this Use Agreement, the parties agree that trial of such action shall be vested exclusively in the state courts of New York, in the County where the City is incorporated or in the United States District Court for the Eastern District of New York.

11.7 *Consent Criteria.* In any case where the approval or consent of one party hereto is required, requested or otherwise to be given under this Use Agreement, such party shall not unreasonably delay, condition, or withhold its approval or consent.

11.8 *Representations and Warranties.* Each of the parties to this Agreement represents and warrants that it has the full right, power, legal capacity, and authority to enter into and perform the parties' respective obligations hereunder and that such obligations shall be binding upon such party without the requirement of the approval or consent of any other person or entity in connection herewith, except as provided in § 3.2 above.

11.9 *Amendment of Use Agreement.* This Use Agreement may not be amended except pursuant to a written instrument signed by both parties.

11.10 *Entire Agreement.* This Use Agreement contains the entire understanding between the parties with respect to the subject matter herein. There are no representations, agreements, or understandings (whether oral or written) between or among the parties relating to the subject matter of this Use Agreement which are not fully expressed herein.

In witness whereof, and in order to bind themselves legally to the terms and conditions of this Use Agreement, the duly authorized representatives of the parties have executed this Use Agreement as of the Effective Date.

City: CITY OF RYE, a New York municipal corporation

By: Scott Pickup

Scott Pickup
[name typed]

Its: City Manager

Date: February 8, 2011

NextG: NEXTG NETWORKS OF NY, INC., a Delaware Corporation

By: Robert L. Delsman

Robert L. Delsman
[name typed]

Its: SVP & General Counsel

Date: February 17, 2011

I HEREBY APPROVE the form and legality of the foregoing Use Agreement this 7TH day of February 2011.

Kristen Wilson Corporation Counsel

By Kristen Wilson, ~~Deputy~~ City Attorney

Exhibits:

Exhibit A -- Equipment

Approved as to Form
and Legal Sufficiency:

Signature/Initials

Date: 2 / 11 /20 11

Exhibit A

Westchester, NY
Rev 01-19-2010

Street Light Pole

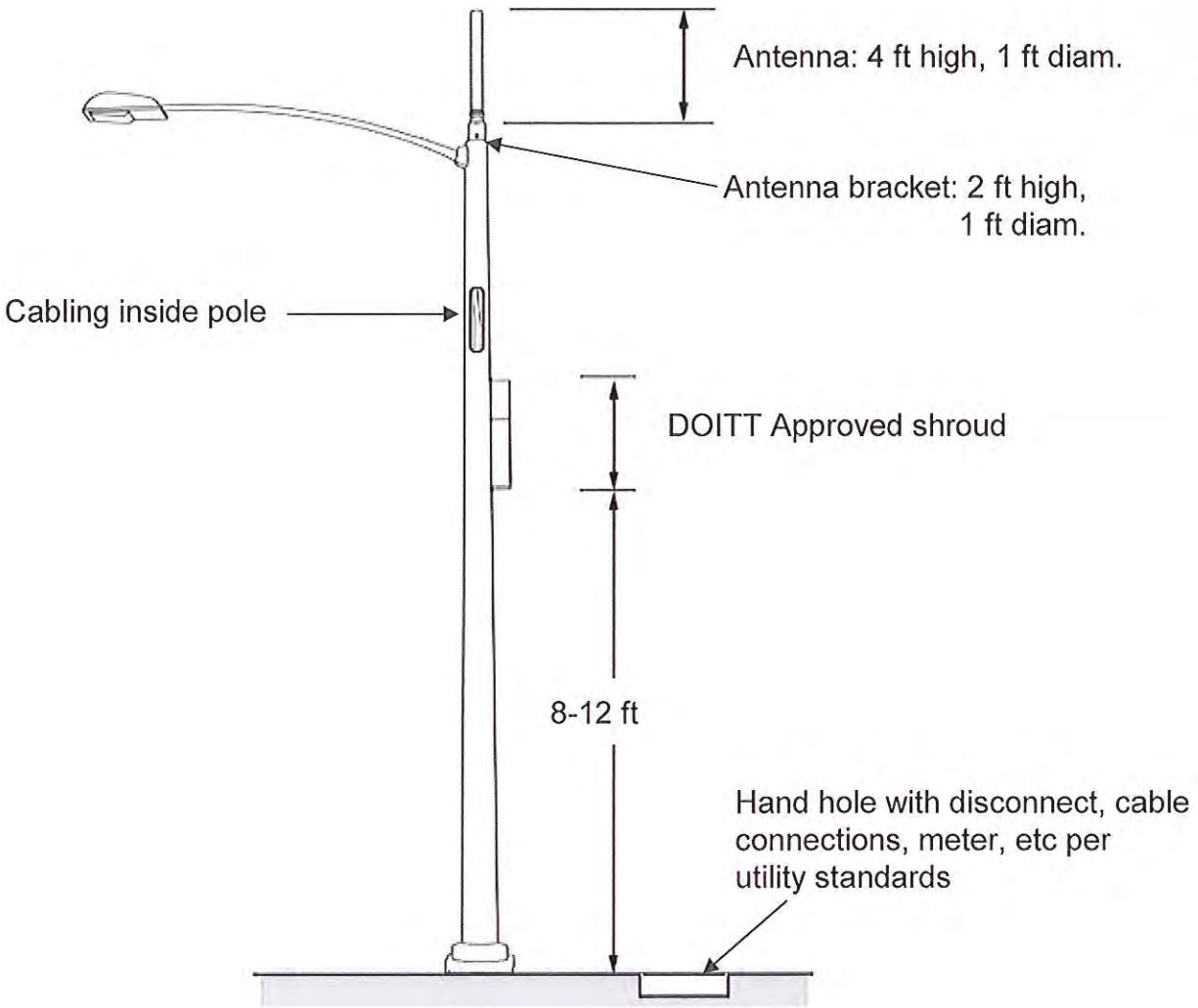

Street Light Pole

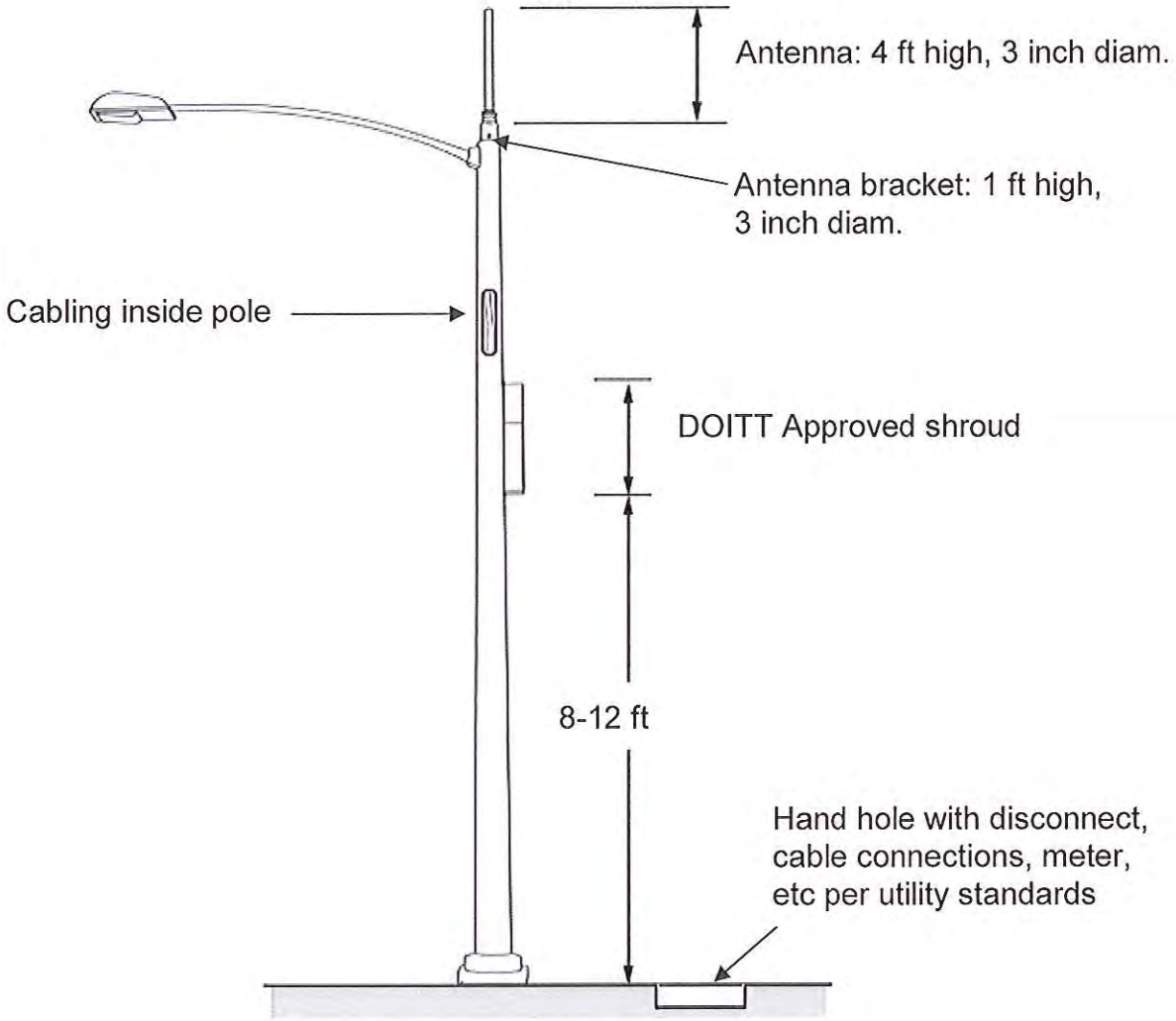

Street Light Pole

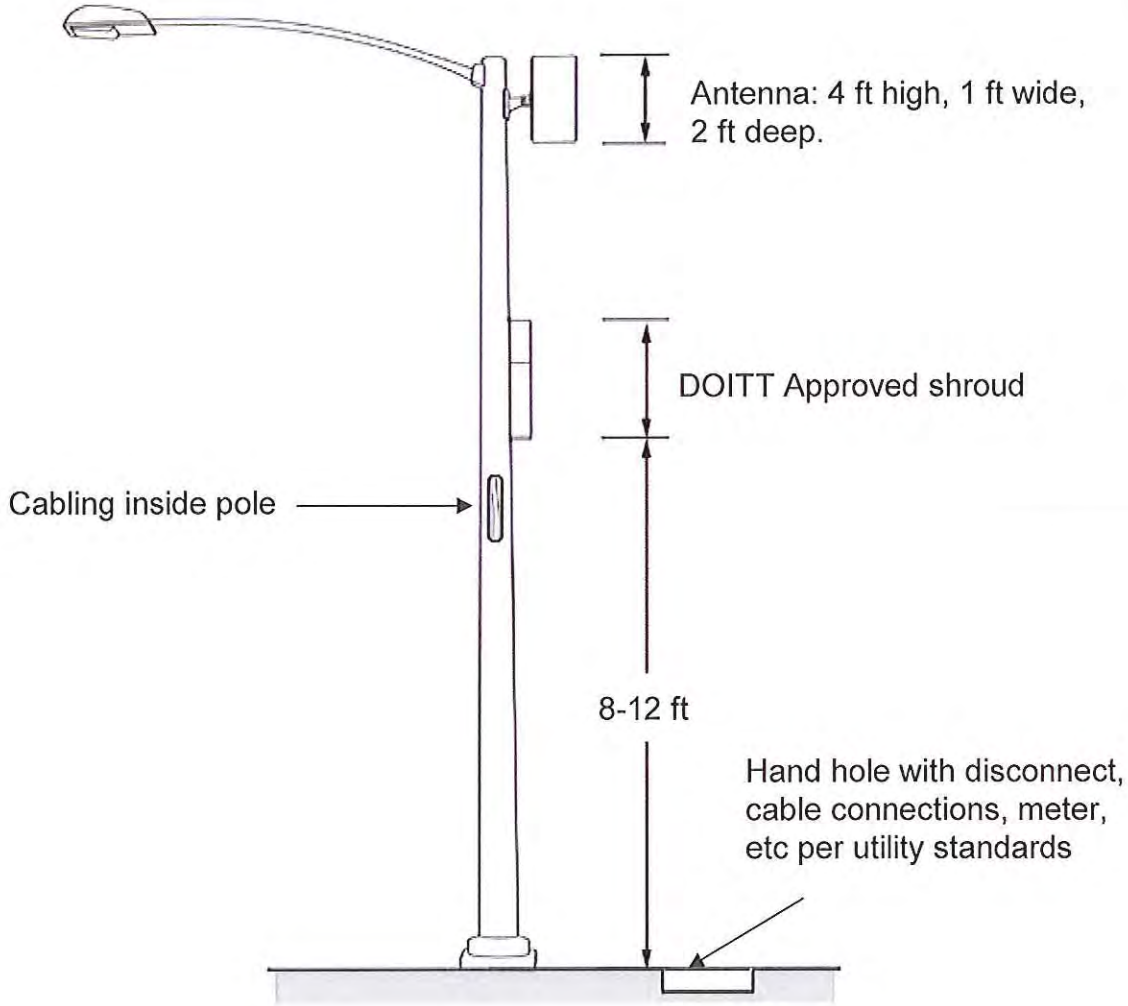

Street Light Pole

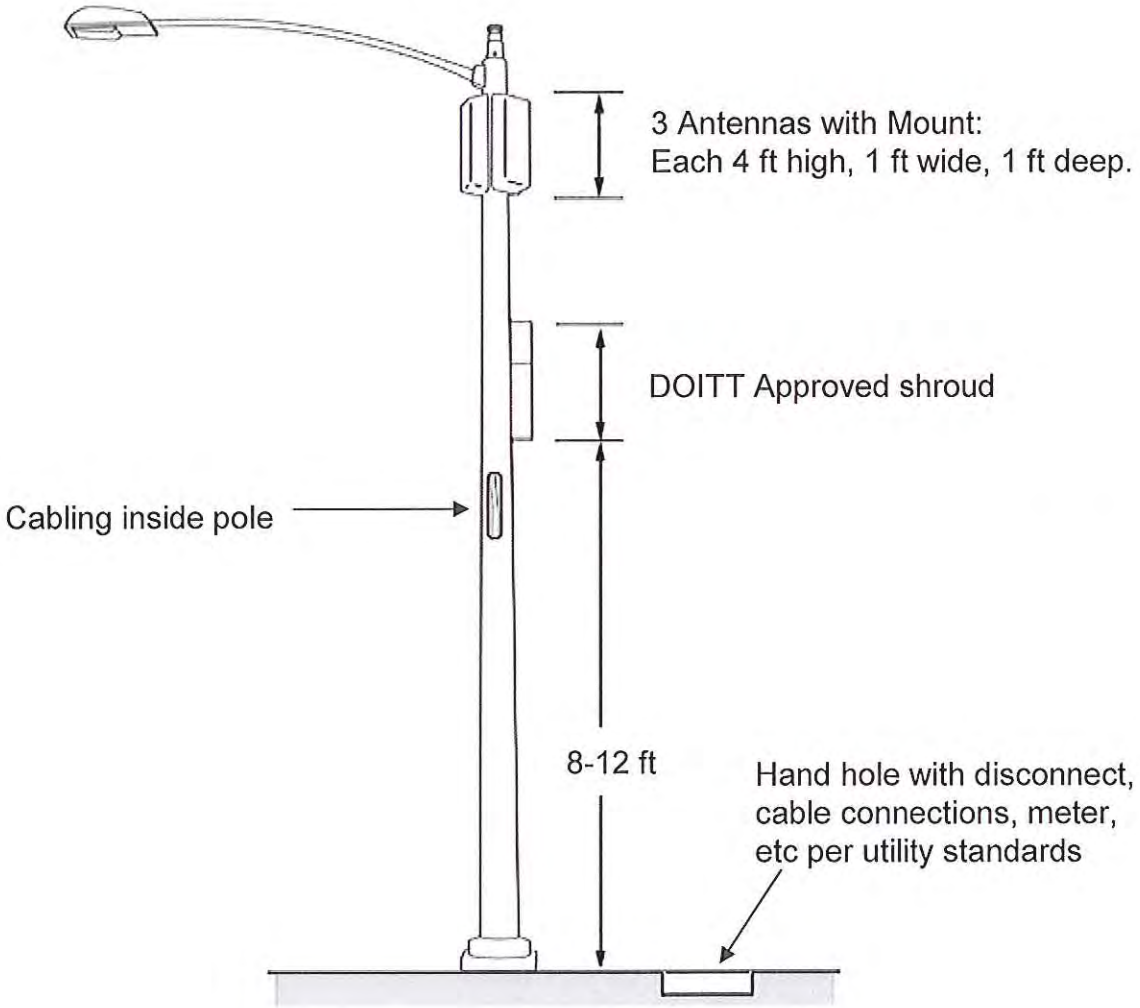

Street Light Pole

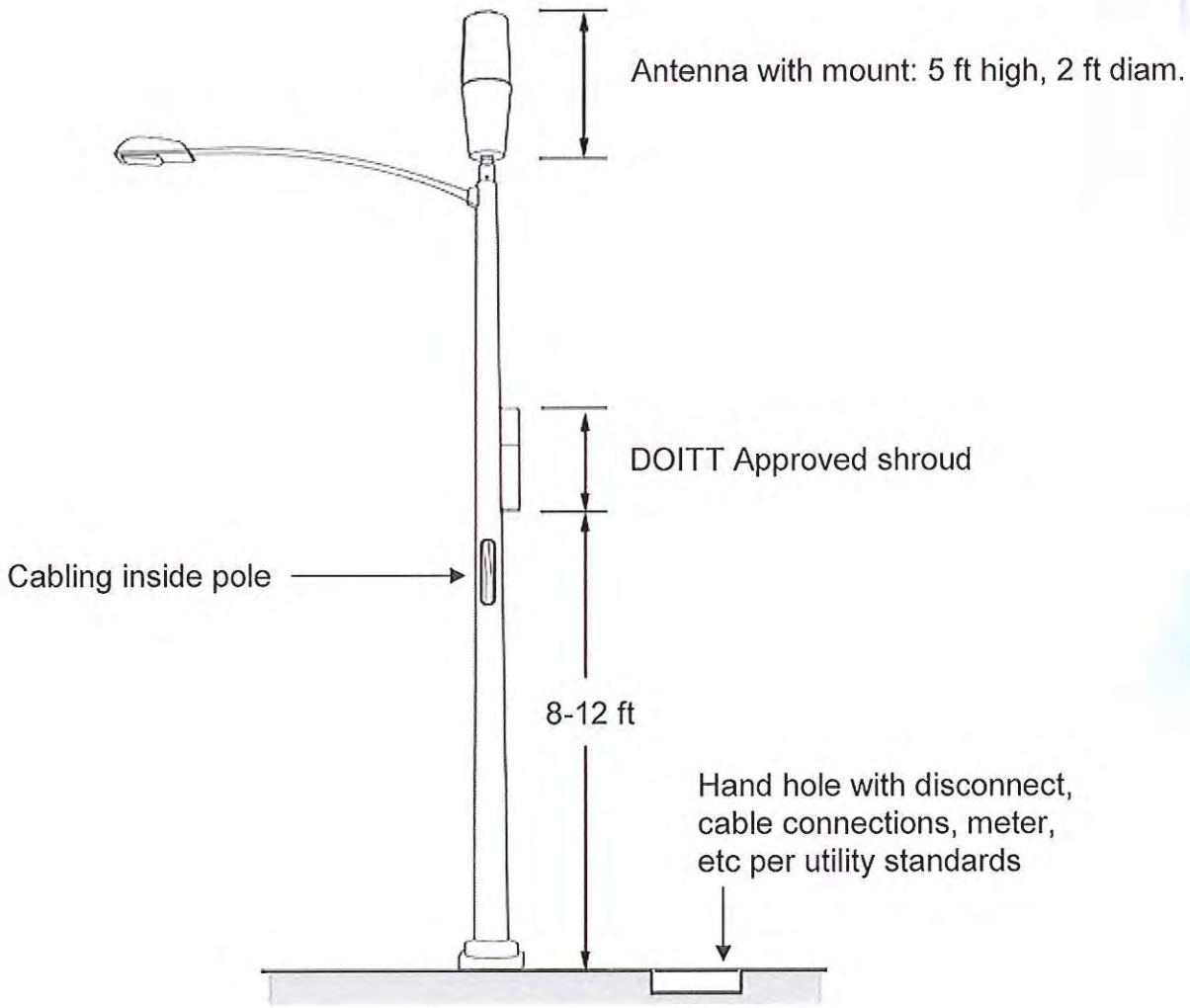

Traffic Light Pole

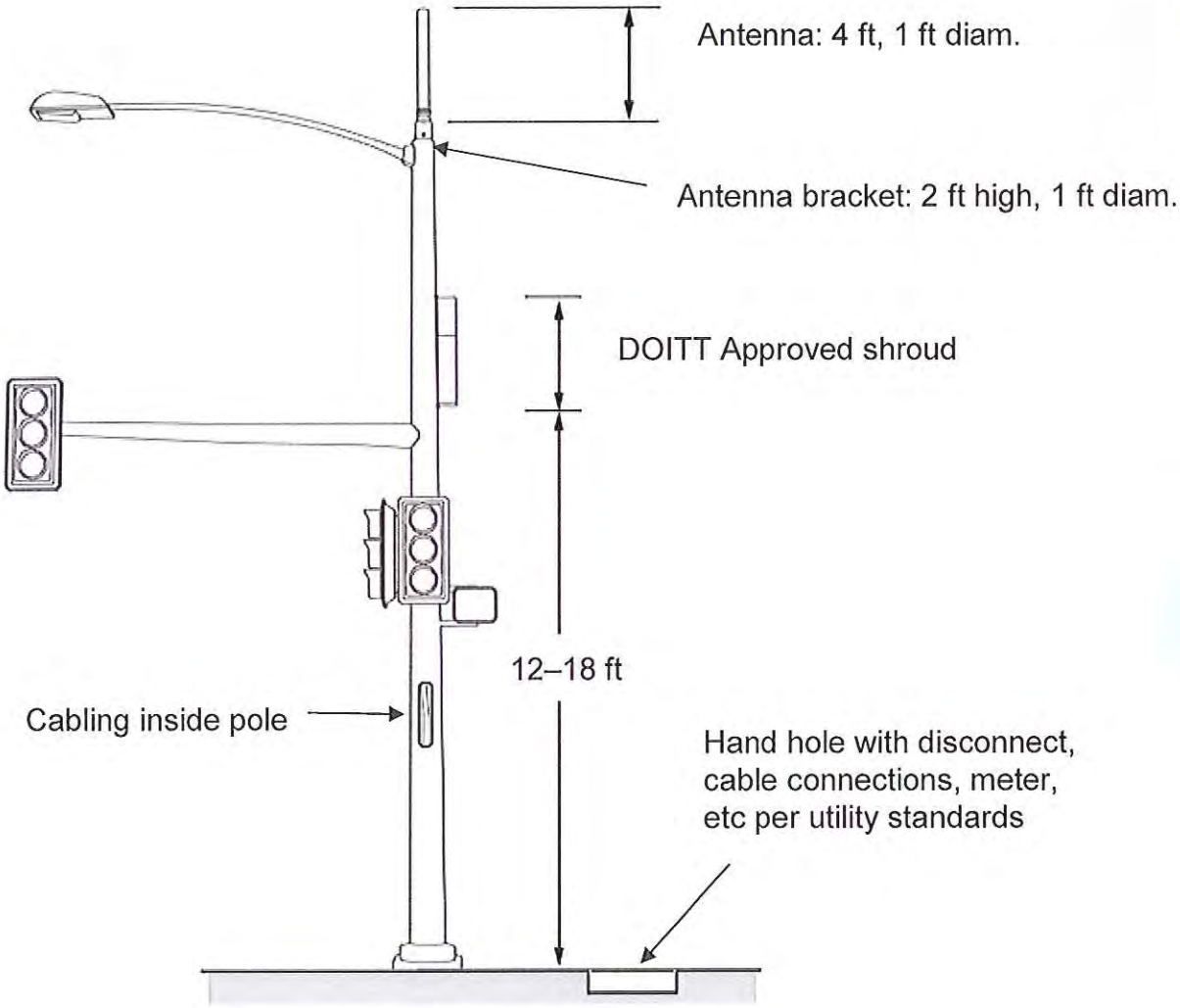

Traffic Light Pole

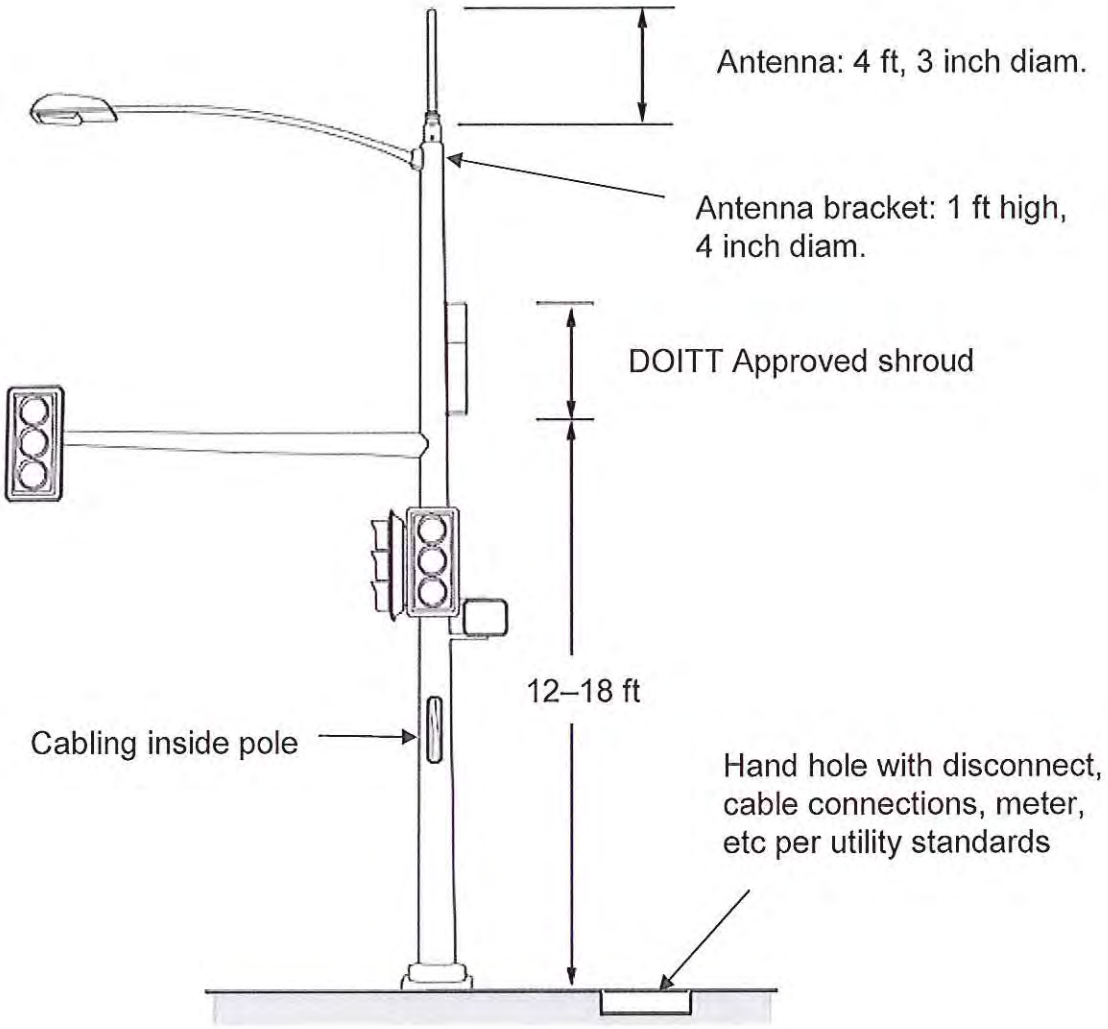

Traffic Light Pole

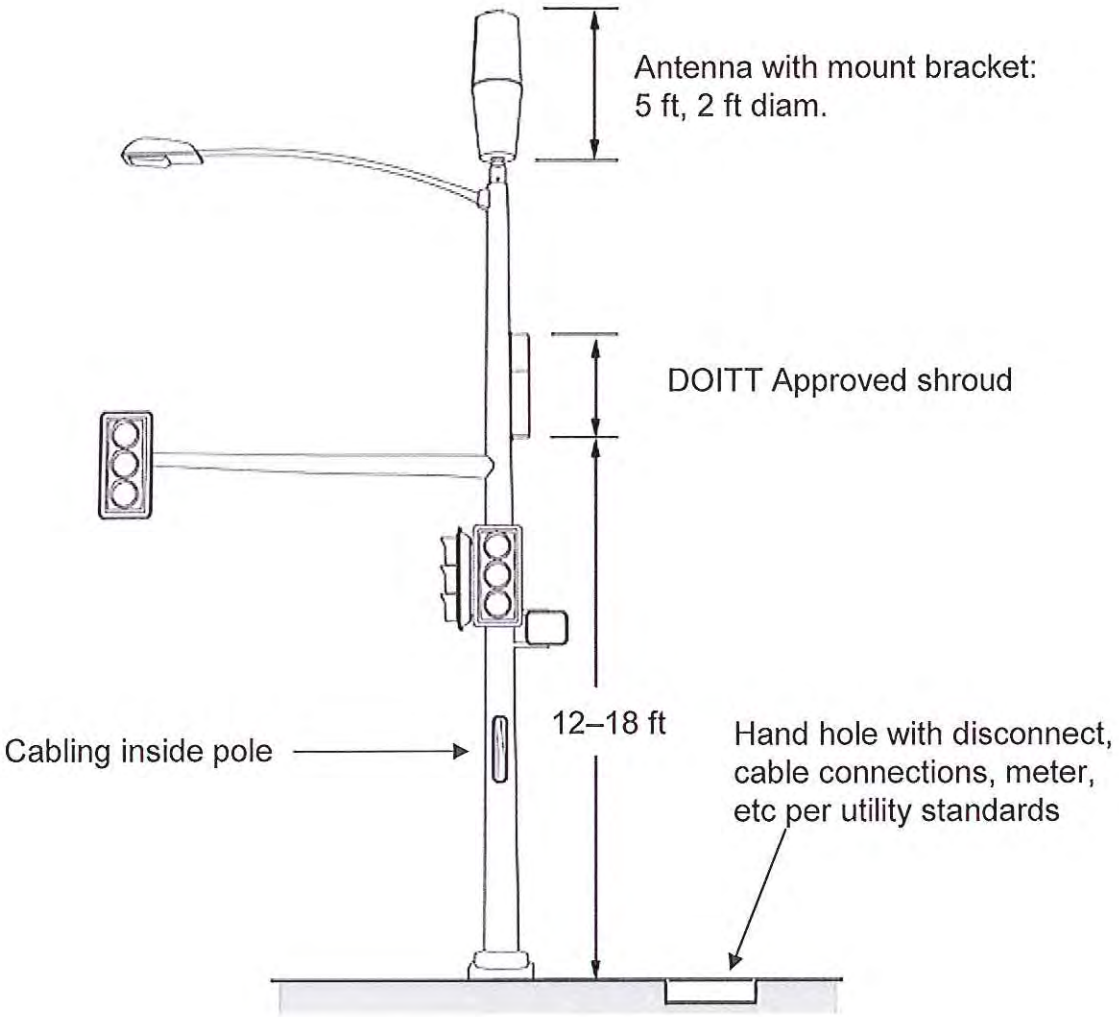

Traffic Light Pole

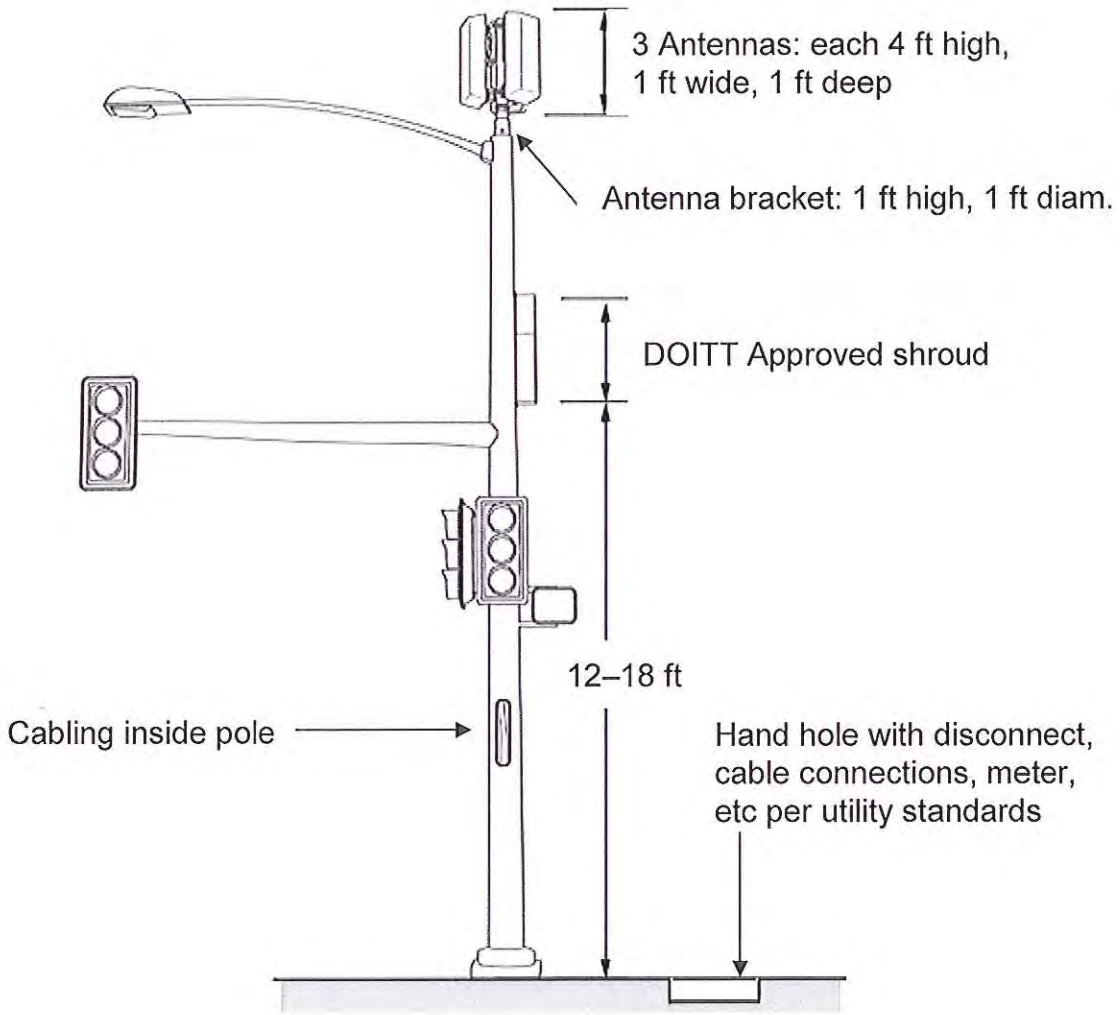

Antenna in Communications Space on Power Pole

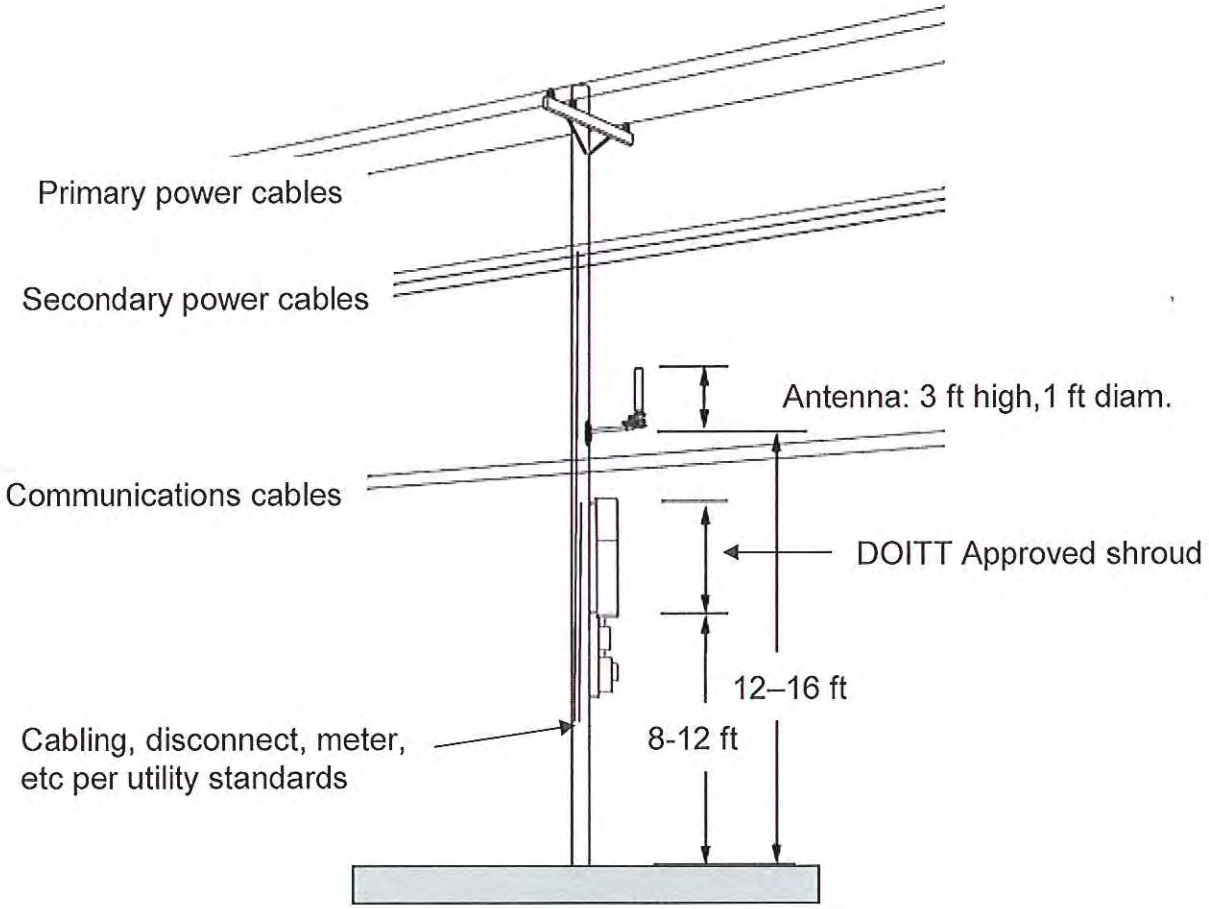

Antenna in Communications Space on Power Pole

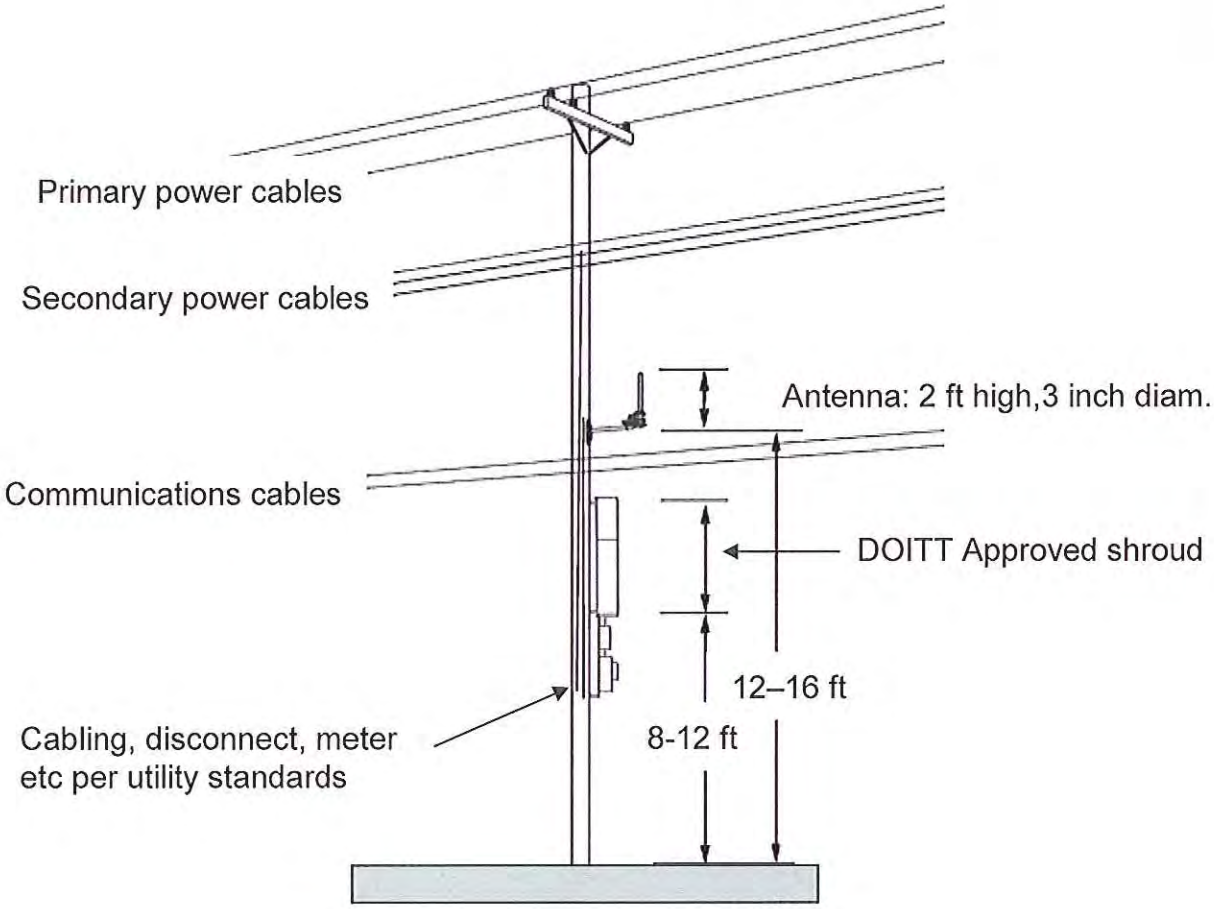

Antenna in Communications Space on Power Pole

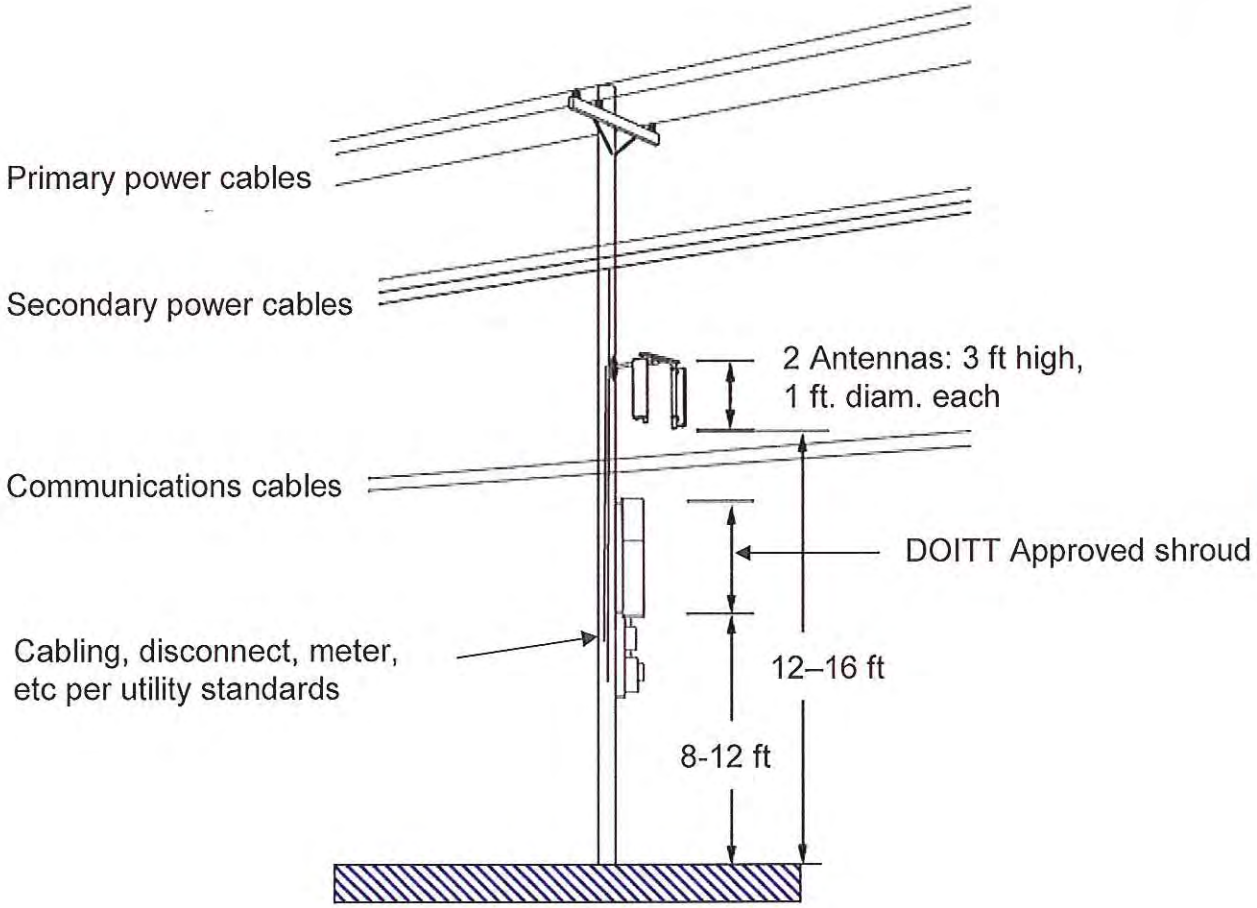

Antenna in Communications Space on Power Pole

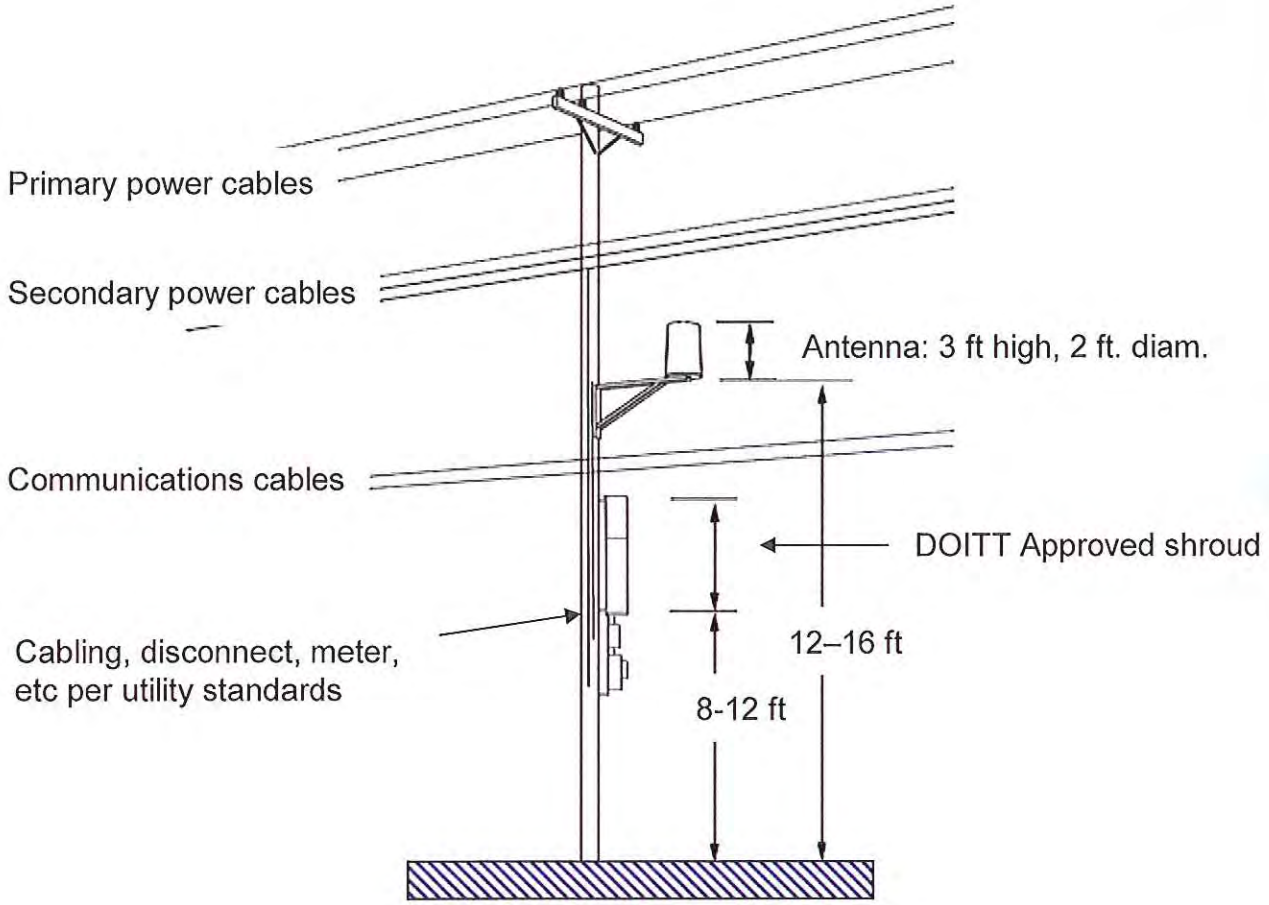

Antenna Pole Top Extension over Primary

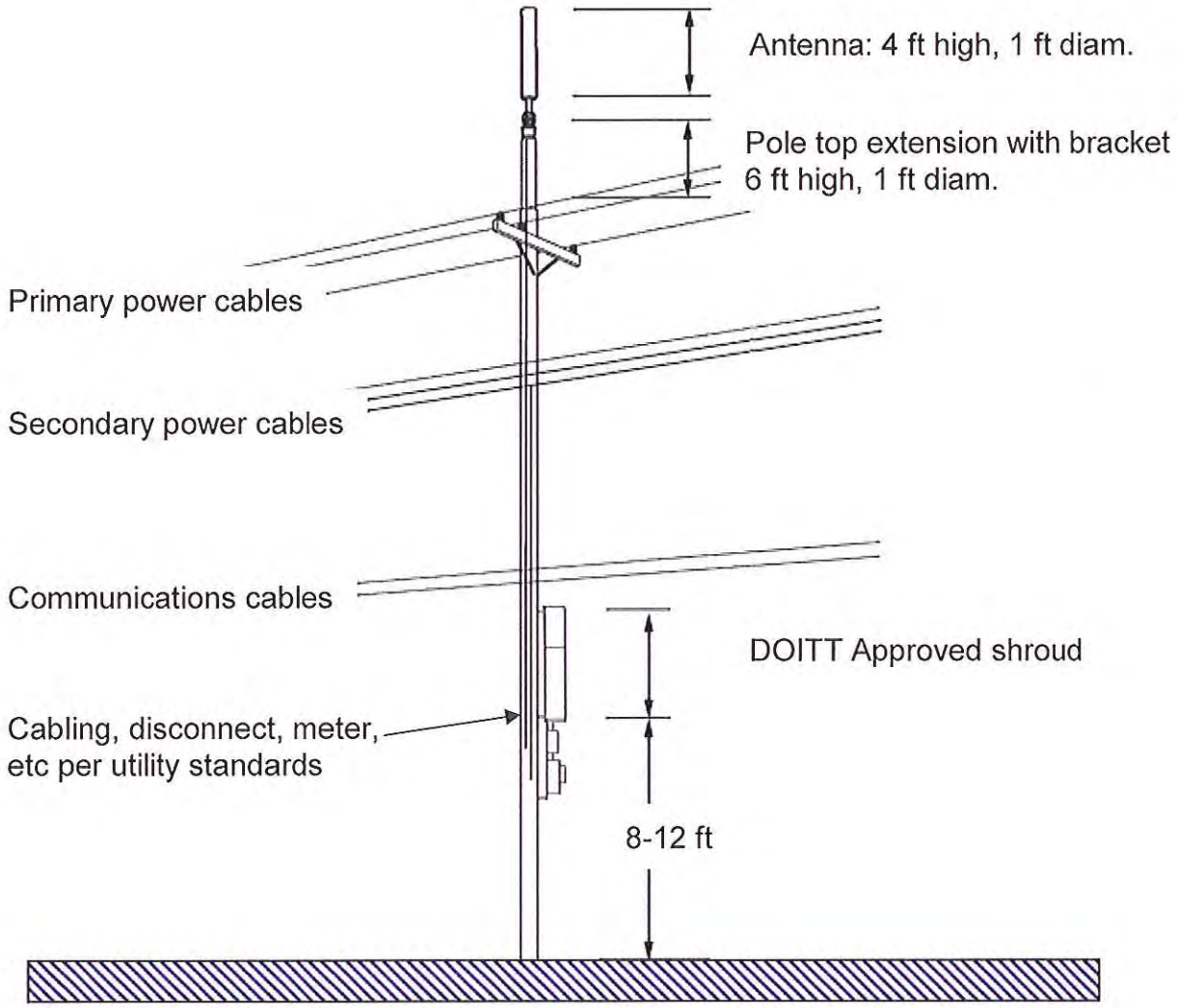

Antenna Pole Top Extension over Primary

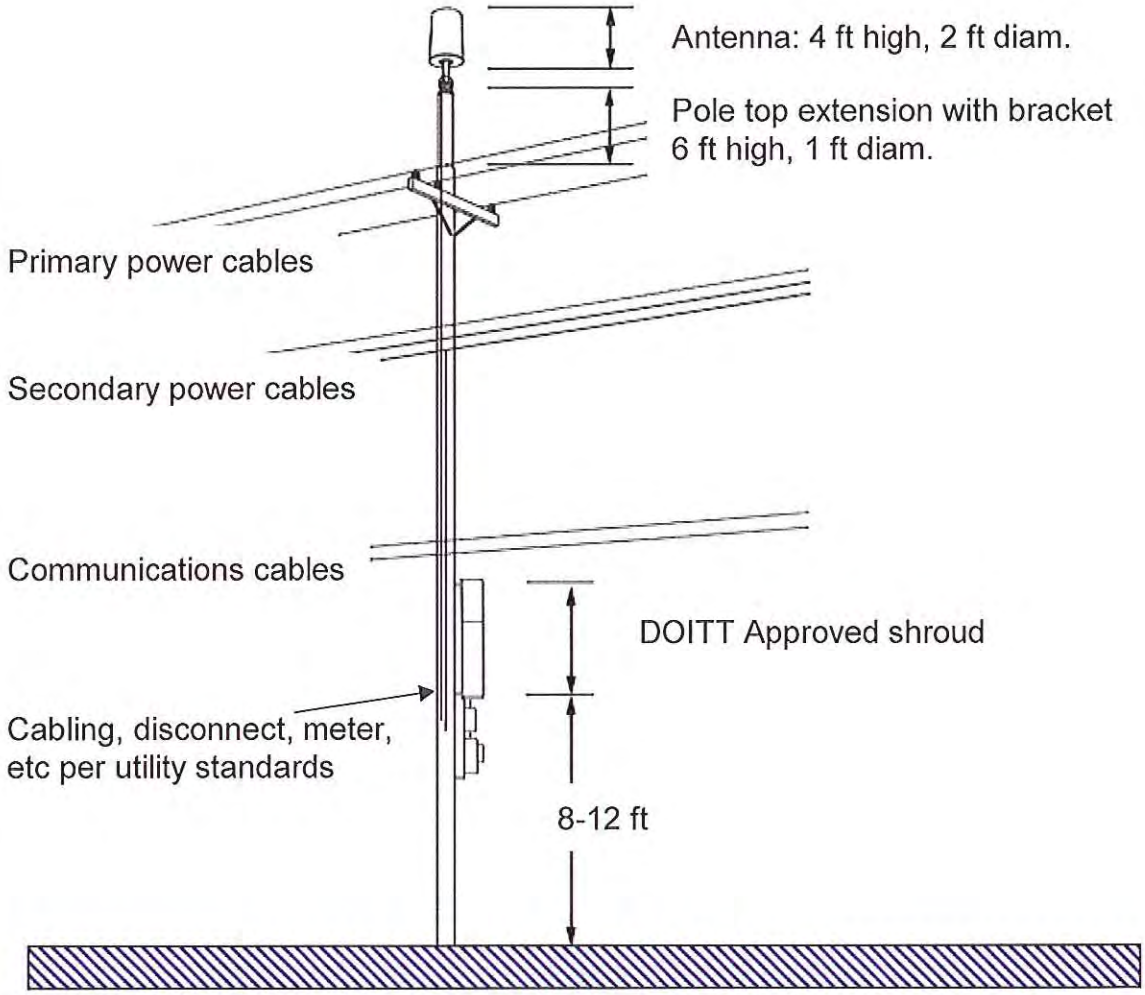

Antenna Pole Top Extension over Secondary

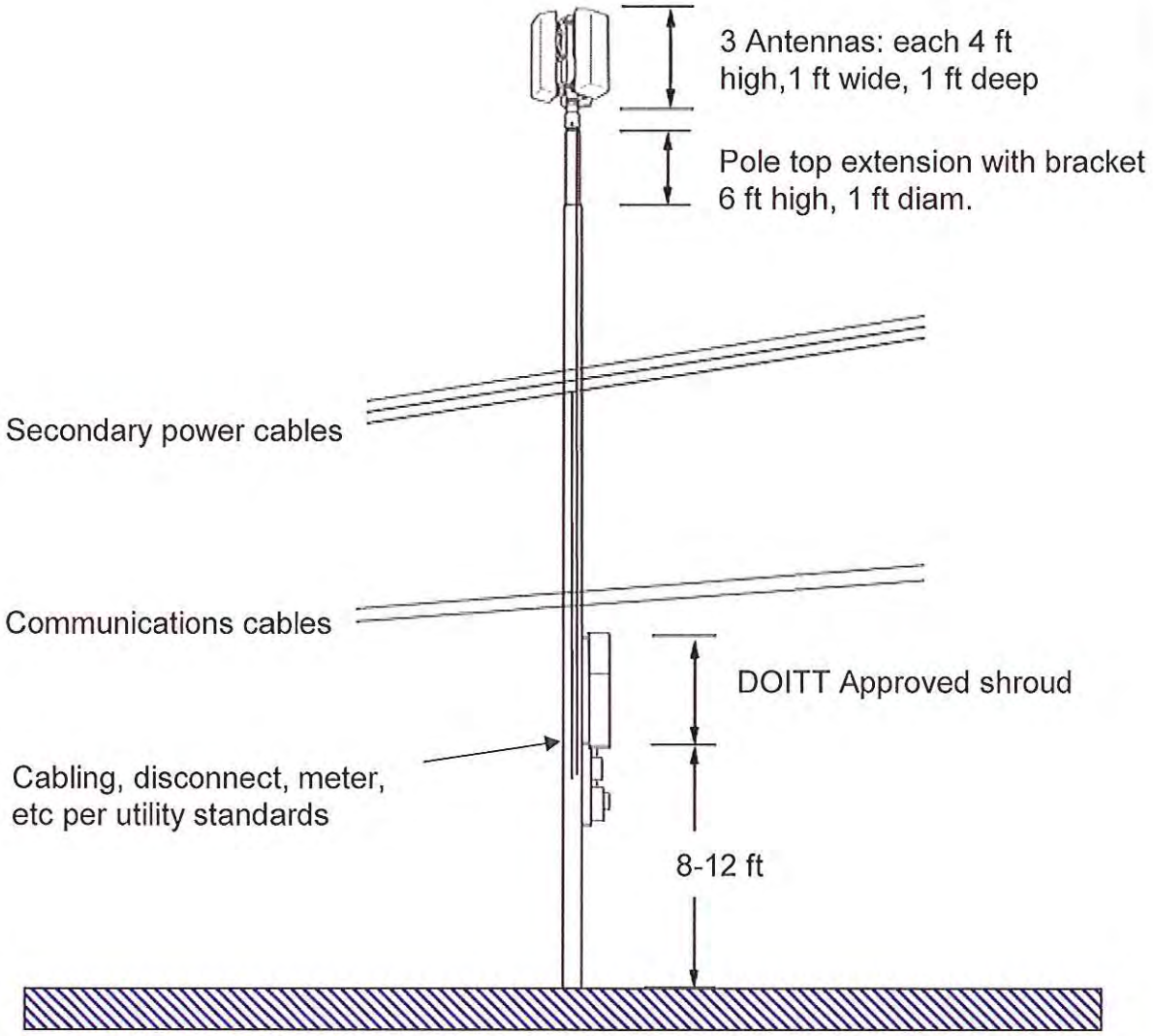

Antenna Pole Top Extension over Secondary

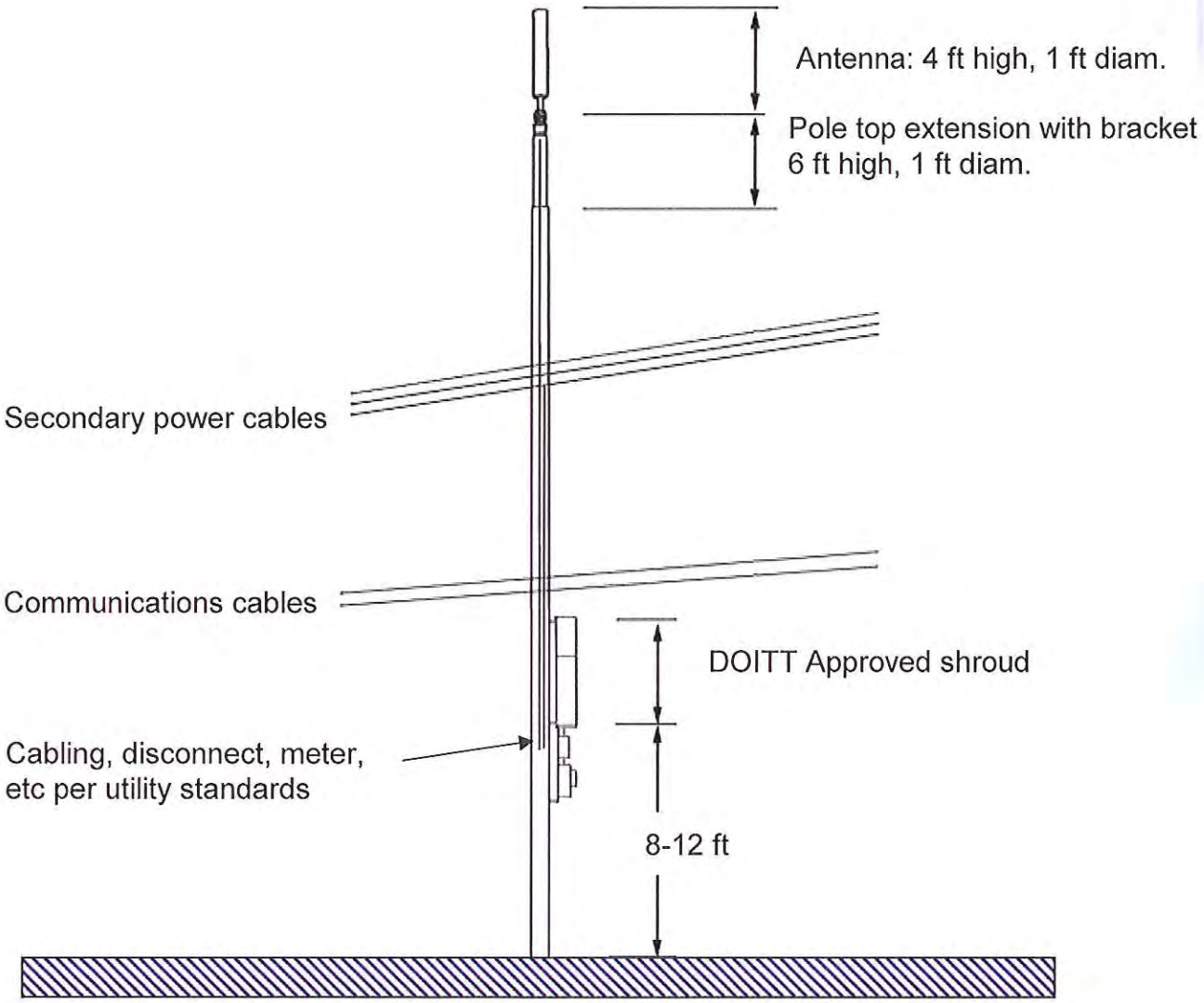

Antenna Pole Top Extension over Secondary

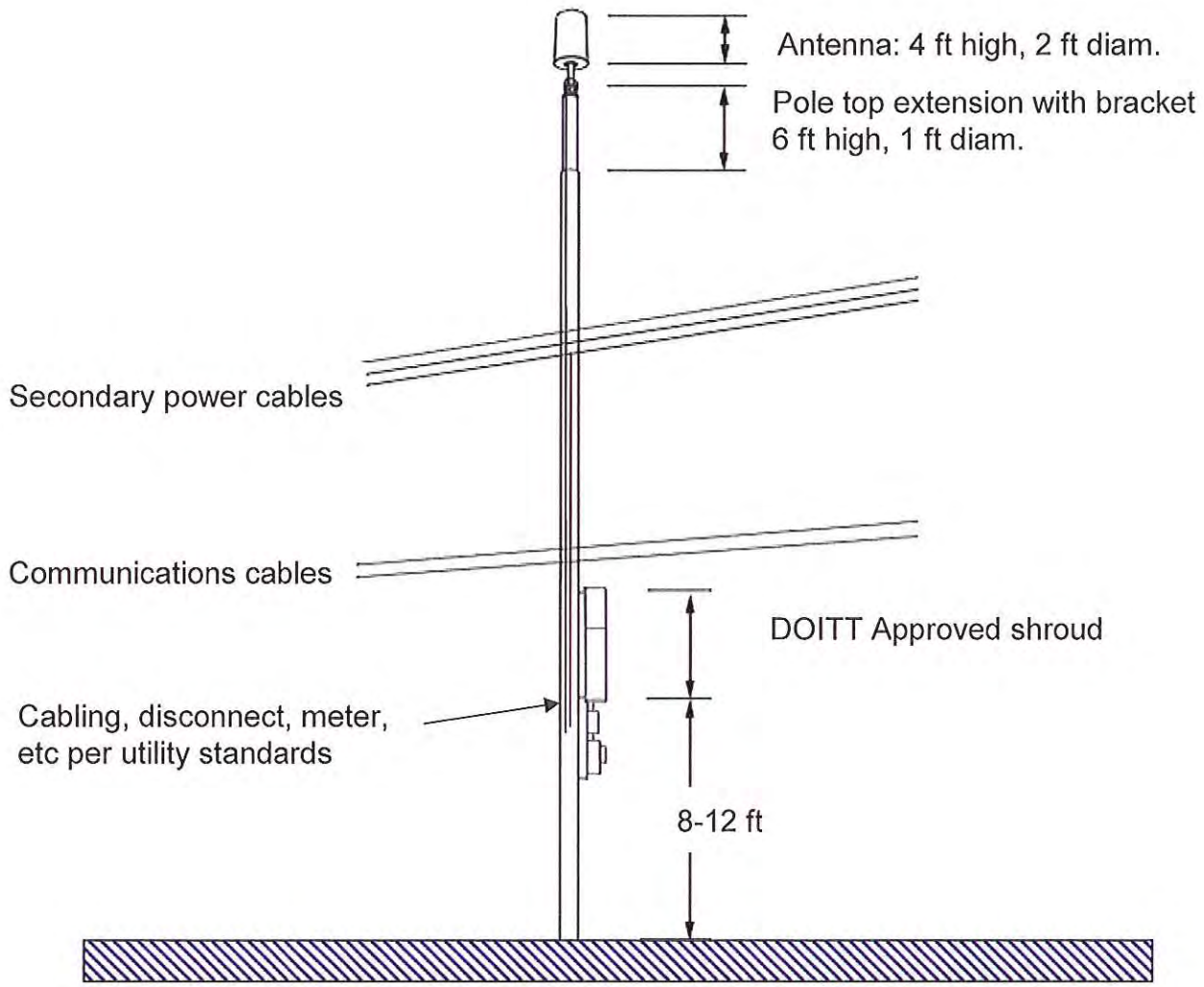

Antenna at Top of Power Pole

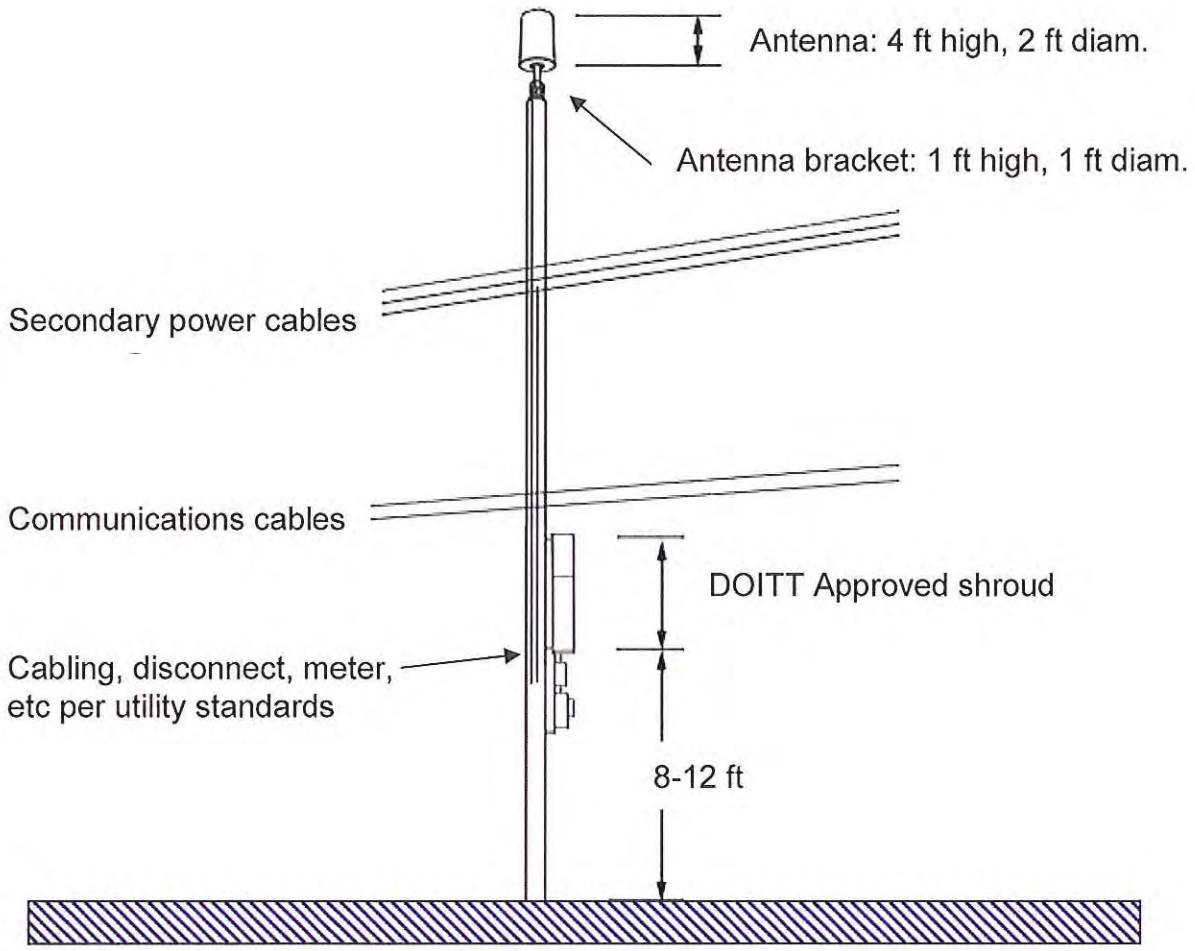

Antenna at Top of Power Pole

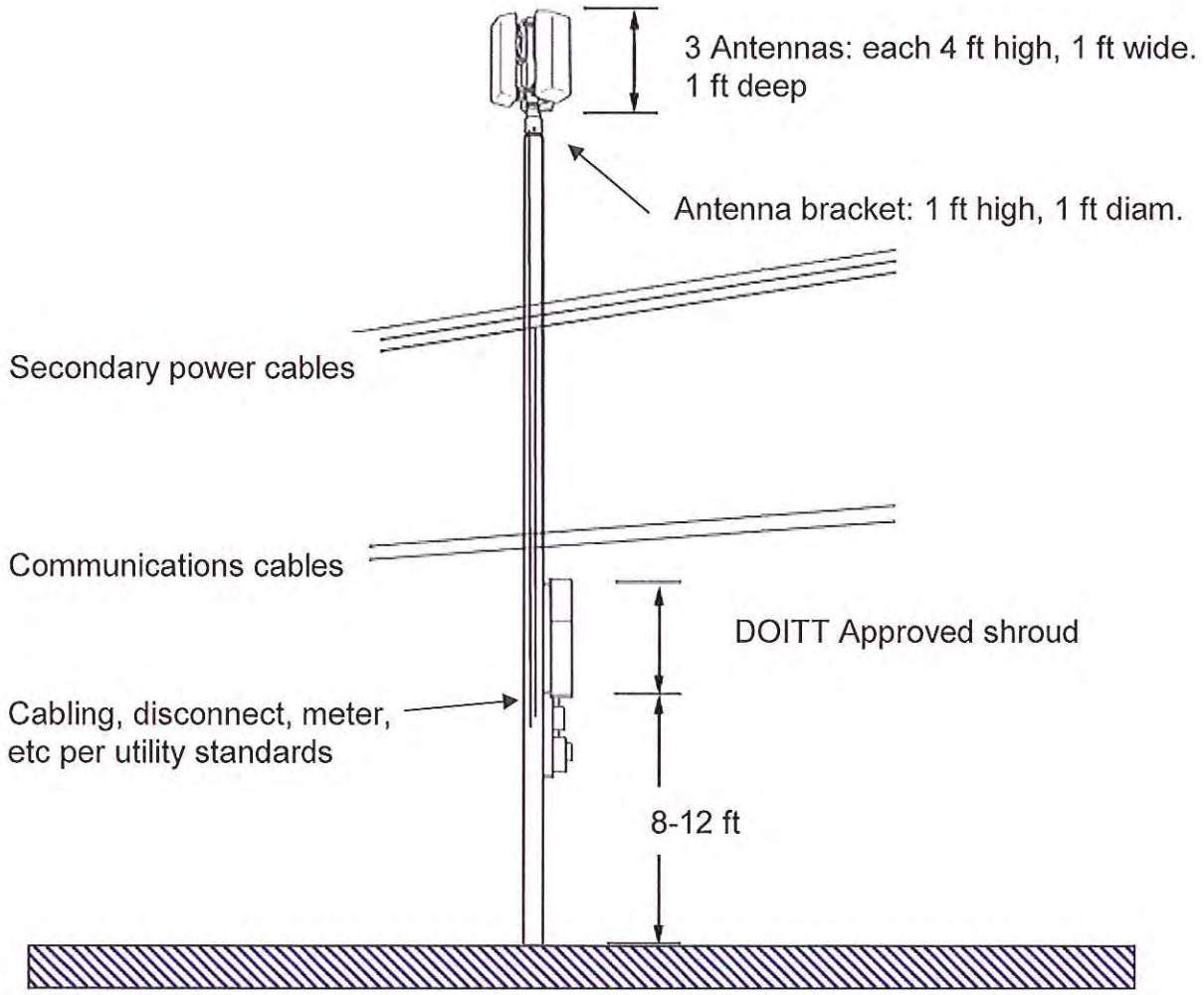

Antenna at Top of Power Pole

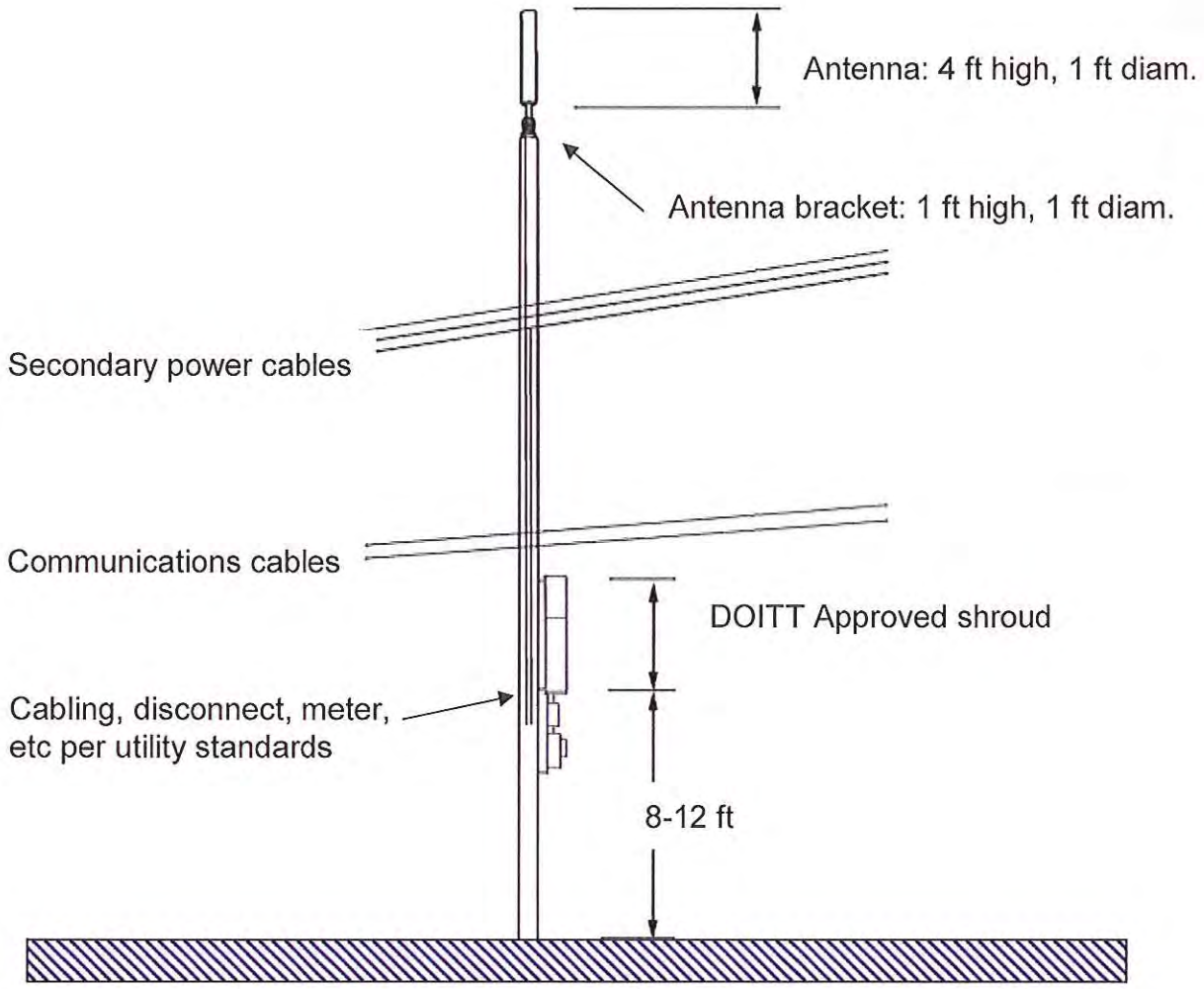

Antenna at Top of Power Pole

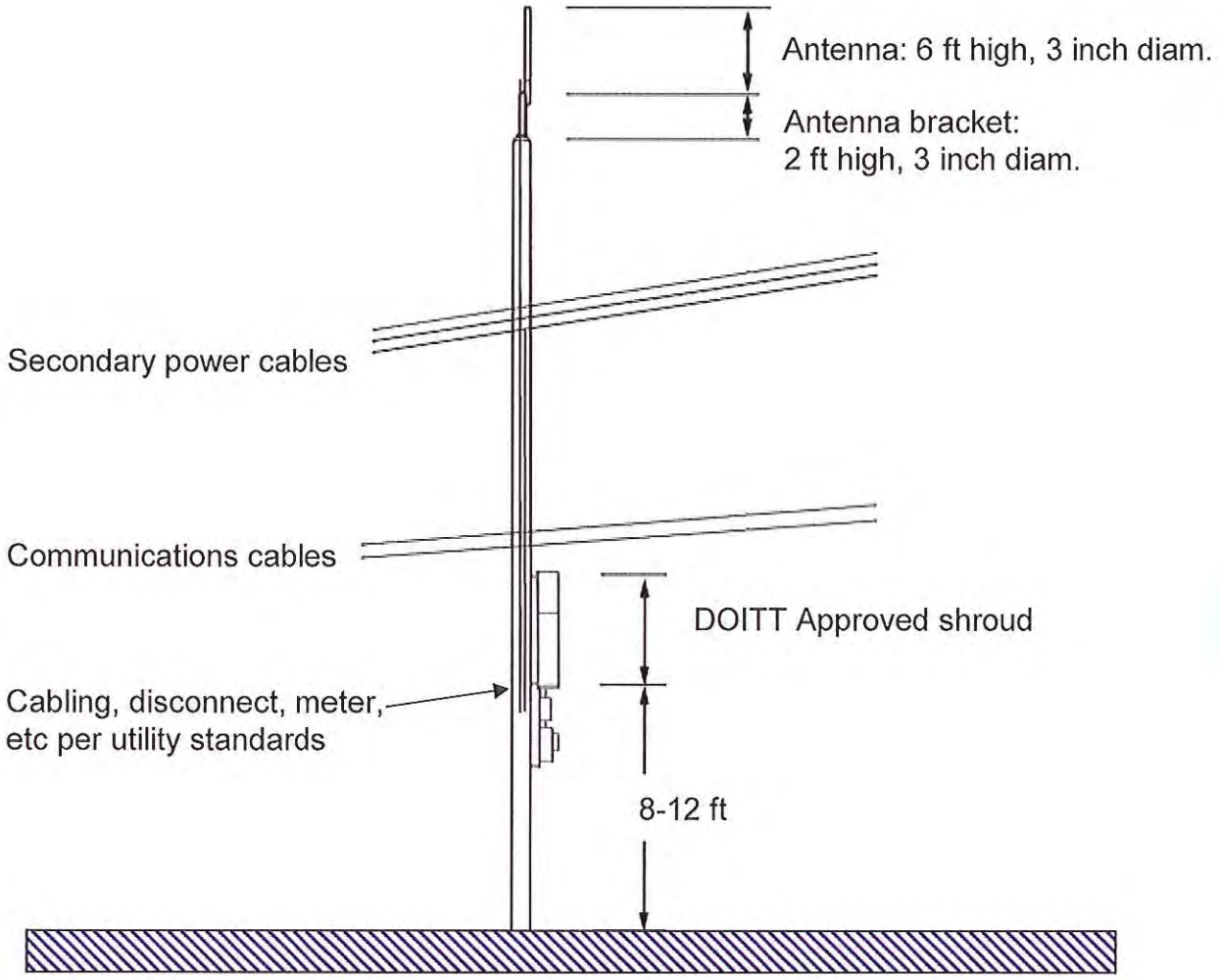

Equipment in Pedestal

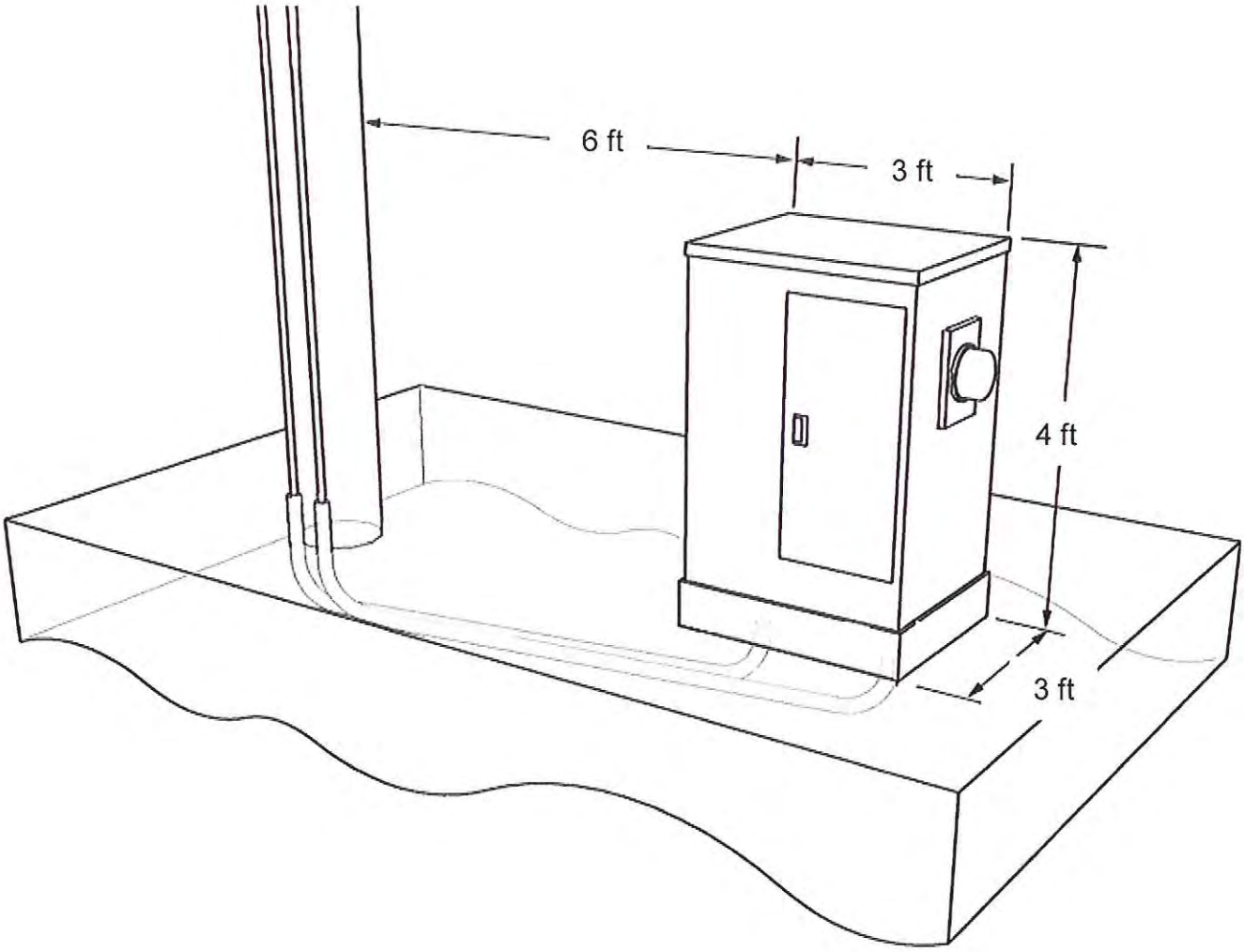

FIRST AMENDMENT TO RIGHT-OF-WAY USE AGREEMENT

THIS FIRST AMENDMENT TO RIGHT-OF-WAY USE AGREEMENT (this "First Amendment") made as of the Effective Date below, is entered into by and between the **CITY OF RYE** (the "City"), a municipal corporation duly organized and validly existing under the laws of the State of New York (the "State"), and **CROWN CASTLE NG EAST LLC (F/K/A NEXTG NETWORKS OF NY, INC.)** ("Crown Castle"), a Delaware limited liability company.

W I T N E S S E T H:

WHEREAS, the City has previously entered into a Right-of-Way Use Agreement with Crown Castle to permit Crown Castle to utilize certain facilities within the City's rights-of-way to maintain a fiber-based telecommunications network ("Network") for a term commencing February 17, 2011 and ending February 17, 2021, with three (3) five (5) year renewal terms (the "Use Agreement");

WHEREAS, pages 2-23 of Exhibit A to the Use Agreement repeatedly refers to a certain component of Crown Castle's equipment as "DoITT Approved shroud;"

WHEREAS, DoITT is the New York City Department of Information Technology and Telecommunications;

WHEREAS, the City does not fall under DoITT's jurisdiction and DoITT does not own or control any of the poles contemplated in the Use Agreement;

WHEREAS, Consolidated Edison and/or its affiliates ("Con-Ed") does own or control all of the poles contemplated in the Use Agreement;

WHEREAS, the City and Crown Castle desire to amend the Use Agreement to reflect that Con-Ed owns or controls the poles contemplated in the Use Agreement and that any equipment used by Crown Castle is approved by Con-Ed; and

WHEREAS, pursuant to a resolution duly adopted at its meeting held on April __, 2016, the City Council authorized the execution of an amendment to the Use Agreement to replace Exhibit A attached to the Use Agreement with a new Exhibit A, thereby permitting Crown Castle to utilize certain equipment that is approved by Con-Ed.

NOW THEREFORE, pursuant to the terms, provisions, covenants and conditions more fully set forth below, the Parties hereto agree as follows:

1. Replacement of Exhibit A

Exhibit A attached to the First Amendment hereby replaces and nullifies the Exhibit A attached to the Use Agreement.

2. Effective Date

The effective date of this First Amendment shall be April __, 2016.

3. <u>Full Force and Effect</u>

Except as amended by this First Amendment, the terms and conditions of the Use Agreement shall remain in full force and effect.

THE REMAINDER OF THIS PAGE IS INTENTIONALLY LEFT BLANK

IN WITNESS WHEREOF, the Parties have set their hands as of the day and year first above written.

CITY OF RYE

By: _____
Name: _____
Title: _____

CROWN CASTLE NG EAST LLC
(F/K/A NEXTG NETWORKS OF NY, INC.)

By: _____
Name: Lewis Kessler
Title: Vice President, DAS and Small Cell Networks

ACKNOWLEDGEMENTS

State of New York)
)ss.:
County of Nassau)

On the ____ day of _____ in the year 2016, before me, the undersigned, personally appeared _____, personally known to me or proved to me on the basis of satisfactory evidence to be the individual whose name is subscribed to the within instrument and acknowledged to me that she executed the same in her capacity, and that by her signature on the instrument, the individual, or the person upon behalf of which the individual acted, executed the instrument.

_____
Notary Public

State of New York)
)ss.:
County of Nassau)

On the ____ day of _____ in the year 2016, before me, the undersigned, personally appeared Lewis Kessler personally, known to me or proved to me on the basis of satisfactory evidence to be the individual whose name is subscribed to the within instrument and acknowledged to me that he executed the same in his capacity, and that by his signature on the instrument, the individual, or the person upon behalf of which the individual acted, executed the instrument.

_____
Notary Public

State Level Regulatory Overview

Crown Castle is classified by the New York Public Service Commission (NY PSC) as, “telephone corporation which owns, operates or manages any radio-telephone facility used in providing for hire one-way or two-way radio communication of any form whatsoever between points in New York State.”

- A telephone corporation is required to obtain a Certificate of Public Convenience and Necessity (CPCN) from the NY PSC in order to access the public rights-of-way for the purpose of installing telecommunications facilities.
  - Crown Castle, under its subsidiary Crown Castle NG East Inc., has been granted a CPCN by the NY PSC (4/4/2003).

State of New York CPCN

STATE OF NEW YORK DEPARTMENT OF PUBLIC SERVICE
THREE EMPIRE STATE PLAZA, ALBANY, NY 12223-1350
Internet Address: http://www.dps.state.ny.us

PUBLIC SERVICE COMMISSION

WILLIAM M. FLYNN
Chairman
THOMAS J. DUNLEAVY
JAMES D. BENNETT
LEONARD A. WEISS
NEAL N. GALVIN

DAWN JABLONSKI
General Counsel

JANET HAND DEIXLER
Secretary

April 4, 2003

Julie Kaminski Corsig
Davis Wright Tremaine LLP
1500 K Street, Suite 450
Washington, D.C. 2005

Re: Case No. 03-C-0027

Dear Ms. Corsig:

The application, by NextG Networks of NY, Inc. on January 7, 2003, for a Certificate of Public Convenience and Necessity to operate in New York State as a facilities-based provider and reseller of telephone service, without authority to provide local exchange service, is hereby approved. This approval is based upon the accuracy of the information provided in the company's application and may be revoked if the application is found to contain false or misleading information, for failure to file or maintain current tariffs, or for violation of Commission rules and regulations.

The company's tariff, P.S.C. No. 1 – Telephone, is also approved.

The company is not authorized to use its own operators to handle 0- (emergency or non-emergency) calls. Such calls must be routed to another telephone company or operator services provider authorized to handle such calls, until such time as an amended Certificate of Public Convenience and Necessity is obtained pursuant to Part 649.6 of the Commission's rules.

The company must obtain any required consents of municipal authorities before commencing construction of telephone lines. It must also comply with applicable federal laws, New York State Public Service Law and related statutes, and the Commission's rules and regulations.

The company is also required to file a Statement of Gross Intrastate Operating Revenues by March 31 each year. It will be notified in writing each year of the required content and format of this report.

Finally, please complete and return the enclosed, two-page questionnaire to Maria Le Boeuf of our staff within 30 days of receipt of this letter. This information will be added to the directory of telephone companies posted at our website, in order to help consumers search for companies available to meet their telecommunications needs. Any updates or changes should be promptly forwarded as well.

If you have any questions, please contact Maria Le Boeuf at (518) 474-1362.

By direction and delegation
of the Commission,

Allan H. Bausback

Allan H. Bausback
Director
Office of Communications

cc: Robert Delsman, Esq.
NextG Networks of NY, Inc.
2033 Gateway Place, Suite 500
San Jose, CA 95110-3709

Enclosure

CROWN CASTLE

Proposed Locations in the City Of Rye

Customer Node ID	Latitude	Longitude	Closest Street Address	On Street
ODAS_WEST_N192	40.979977	-73.699977	290 North st	North St
ODAS_WEST_N194	40.974761	-73.694671	12 Sharon Ln	Sharon Ln
ODAS_WEST_N199	40.979682	-73.697097	124 Maple ave	Maple Ave
ODAS_WEST_N206	40.980935	-73.681797	44 Grace Church St	Grace Church St
ODAS_WEST_N207	40.982891	-73.67976	8 Holly Ln	Holly Ln
ODAS_WEST_N216	40.983397	-73.690144	151 Locust ave	Locust Ave
ODAS_WEST_N226	40.973723	-73.699185	401 Theodore Fremd Ave	Theall Rd
ODAS_WEST_N227	40.972115	-73.700646	411 Theodore Fremd Ave	Theall Rd
ODAS_WEST_N228	40.96958	-73.702641	555 Theodore Fremd Ave	Theall Rd
ODAS_WEST_N231	40.968234	-73.703793	330 Theall Rd	Osborne Rd
ODAS_WEST_N233	40.966302	-73.701183	57 Osborne Rd	Osborne Rd
ODAS_WEST_N239	40.964291	-73.703176	42 Lasalle Ave	Glen Oaks Dr
ODAS_WEST_N247	40.961636	-73.69968	47 Soundview Ave	Soundview Ave
ODAS_WEST_N248	40.960297	-73.698198	98 Soundview Ave	Soundview Ave
ODAS_WEST_N249	40.958368	-73.69581	170 Soundview Ave	Soundview Ave
ODAS_WEST_N255	40.963749	-73.682672	339 Rye Beach Ave	Rye Beach Ave
ODAS_WEST_N261	40.960694	-73.691962	19 Hix Ave	Hix Ave
ODAS_WEST_N265	40.959945	-73.683144	630 Forest Ave	Dearborn Ave
ODAS_WEST_N267	40.960442	-73.685816	53 Dearborn Ave	Dearborn Ave
ODAS_WEST_N268	40.962438	-73.68231	578 Forest Ave	Forest Ave
ODAS_WEST_N269	40.95994	-73.688288	2 Garden Dr	Garden Dr
ODAS_WEST_N272	40.961302	-73.686952	10 Van Buren St	Van Buren St
ODAS_WEST_N274	40.957782	-73.687341	51 Hewlett Ave	Hewlett Ave
ODAS_WEST_N279	40.951041	-73.684584	5 Pine Island Rd	Pine Island Rd
ODAS_WEST_N281	40.957526	-73.689085	650 Milton Rd	Milton Rd
ODAS_WEST_N283	40.944423	-73.695083	350 Stuyvesant Ave	Stuyvesant Ave
ODAS_WEST_N285	40.950422	-73.691306	150 Stuyvesant Ave	Stuyvesant Ave
ODAS_WEST_N286	40.962681	-73.705331	421 Park Ave	Park Ave
ODAS_WEST_N287	40.948598	-73.688398	999 Forest Ave	Forest Ave
ODAS_WEST_N288	40.946246	-73.693019	290 Stuyvesant Ave	Stuyvesant Ave
ODAS_WEST_N289	40.955003	-73.690219	740 Old Milton Rd	Old Milton Rd
ODAS_WEST_N252	40.967448	-73.687004	4 Ellsworth St	Playland Pkwy
ODAS_WEST_N271	40.957462	-73.684092	717 Forest Ave	Forest Ave
ODAS_WEST_N282	40.941949	-73.696417	499 Stuyvesant Ave	Stuyvesant Ave
ODAS_WEST_N193	40.976517	-73.693379	95 North st	North St
ODAS_WEST_N195	40.973615	-73.693455	11 North st	North St
ODAS_WEST_N196	40.978064	-73.692768	2 Hammond Rd	Theodore Fremd Ave
ODAS_WEST_N197	40.987699	-73.686586	19 Seneca st	Seneca St
ODAS_WEST_N198	40.982784	-73.696418	255 Central ave	Central Ave
ODAS_WEST_N203	40.984	-73.693498	190 Locust ave	Locust Ave
ODAS_WEST_N208	40.984595	-73.680535	" " Thistle Ln	Thistle Ln
ODAS_WEST_N211	40.984591	-73.683514	17 Purdy ave	Purdy Ave
ODAS_WEST_N218	40.986494	-73.677473	17 Peck ave	Peck Ave

ODAS_WEST_N219	40.987004	-73.682348	33 Cedar st	Cedar St
ODAS_WEST_N221	40.984812	-73.68887	14 Ridgewood Dr	Ridgewood Dr
ODAS_WEST_N222	40.985742	-73.686616	4 Ridgewood Dr	Iroquois St
ODAS_WEST_N223	40.987111	-73.687746	64 Highland Rd	Highland Rd
ODAS_WEST_N229	40.96945	-73.697551	37 Colby Ave	Old Post Rd
ODAS_WEST_N234	40.96887	-73.692753	80 Claremont Ave	Claremont Ave
ODAS_WEST_N235	40.968316	-73.694972	45 Fulton Ave	Fulton Ave
ODAS_WEST_N236	40.96659	-73.694493	4 Reymont Ave	Reymont Ave
ODAS_WEST_N237	40.96617	-73.706003	110 Glen Oaks Dr	Glen Oaks Dr
ODAS_WEST_N240	40.966355	-73.703546	12 Harding Dr	Harding Dr
ODAS_WEST_N242	40.965906	-73.693184	112 Sonn Dr	Sonn Dr
ODAS_WEST_N250	40.967361	-73.697316	51 Franklin Ave	Franklin Ave
ODAS_WEST_N253	40.965131	-73.686488	444 Milton Rd	Milton Rd
ODAS_WEST_N254	40.965159	-73.684331	78 Elmwood Ave	Elmwood Ave
ODAS_WEST_N256	40.964766	-73.681298	511 Forest Ave	Forest Ave
ODAS_WEST_N257	40.963197	-73.697396	31 Allendale Dr	Allendale Dr
ODAS_WEST_N258	40.963471	-73.69514	110 Oakland Beach Ave	Oakland Beach Ave
ODAS_WEST_N259	40.960655	-73.695406	20 Chamberlain St	Chamberlain St
ODAS_WEST_N260	40.959633	-73.693772	12 Byrd St	Byrd St
ODAS_WEST_N262	40.962217	-73.688585	530 Milton Rd	Oakland Beach Ave
ODAS_WEST_N263	40.96304	-73.686006	46 Hill St	Hill St
ODAS_WEST_N264	40.961629	-73.683708	387 Oakland Beach Ave	Halsted Pl
ODAS_WEST_N266	40.962348	-73.691238	1 Rose St	Oakland Beach Ave
ODAS_WEST_N270	40.958612	-73.685862	4 Fairlawn Ct	Fairlawn Ct
ODAS_WEST_N275	40.954555	-73.687069	21 Green Ave	Green Ave
ODAS_WEST_N276	40.955742	-73.685681	15 Valleyview Ave	Valleyview Ave
ODAS_WEST_N277	40.953674	-73.688754	31 Overhill Ave	Overhill Ave
ODAS_WEST_N278	40.952667	-73.687736	11 Halls Ln	Halls Ln
ODAS_WEST_N280	40.961833	-73.693775	10 White Birch Dr	White Birch Dr
ODAS_WEST_N284	40.948151	-73.692038	230 Stuyvesant Ave	Stuyvesant Ave

Cross Street 1	Pole ID	Pole Type	Antenna Type
Summit Ave	W29	Wood Comm Zone	BRSAWS360D-698/1710-2-T0-D
Marlene Ct	W1	Wood Comm Zone	BRSAWS360D-698/1710-2-T0-D
North St	VZ4	Wood Comm Zone	BRSAWS360D-698/1710-2-T0-D
Ralston St	T610	Wood Comm Zone	BRSAWS360D-698/1710-2-T0-D
Larkspur Ln	NYT 9	Wood Comm Zone	BRSAWS360D-698/1710-2-T0-D
Ridgewood Dr	T16	Wood Comm Zone	BRSAWS360D-698/1710-2-T0-D
Playland Access Dr	T23	Wood Comm Zone	BRSAWS360D-698/1710-2-T0-D
Garver Dr	T168	Wood Comm Zone	BRSAWS360D-698/1710-2-T0-D
Osborne Rd	T6	Wood Comm Zone	BRSAWS360D-698/1710-2-T0-D
Coolidge ave	W18	Wood Comm Zone	BRSAWS360D-698/1710-2-T0-D
Boston Post Rd	T 7	Wood Comm Zone	BRSAWS360D-698/1710-2-T0-D
Lasalle Ave	NYT 7	Wood Comm Zone	BRSAWS360D-698/1710-2-T0-D
Boston Post Rd	NYT 5	Wood Comm Zone	BRSAWS360D-698/1710-2-T0-D
Boston Post Rd	W10	Wood Comm Zone	BRSAWS360D-698/1710-2-T0-D
Boston Post Rd	18	Wood Comm Zone	BRSAWS360D-698/1710-2-T0-D
Halstead Pl	11	Wood Comm Zone	BRSAWS360D-698/1710-2-T0-D
Dalphin Dr	NYT 8	Wood Comm Zone	BRSAWS360D-698/1710-2-T0-D
Forest Ave	W13	Wood Comm Zone	BRSAWS360D-698/1710-2-T0-D
Everett St	6	Wood Comm Zone	BRSAWS360D-698/1710-2-T0-D
Rye Beach Ave	T67	Wood Comm Zone	BRSAWS360D-698/1710-2-T0-D
Milton Rd	T78	Wood Comm Zone	BRSAWS360D-698/1710-2-T0-D
Newberry Pl	10707	Wood Comm Zone	BRSAWS360D-698/1710-2-T0-D
Robert Crisfield Pl	W 9	Wood Comm Zone	BRSAWS360D-698/1710-2-T0-D
Forest Ave	NYT 8	Wood Comm Zone	BRSAWS360D-698/1710-2-T0-D
Hewlett Ave	T86	Wood Comm Zone	BRSAWS360D-698/1710-2-T0-D
Dead End	4	Wood Comm Zone	BRSAWS360D-698/1710-2-T0-D
Van Wagenen Ave	NYT 16	Wood Comm Zone	BRSAWS360D-698/1710-2-T0-D
Florence Ave	NYT 8	Wood Comm Zone	BRSAWS360D-698/1710-2-T0-D
Magnolia Pl	T118	Wood Comm Zone	BRSAWS360D-698/1710-2-T0-D
Van Wagenen Ave	31	Wood Comm Zone	BRSAWS360D-698/1710-2-T0-D
Stuyvesant Ave	T 97	Wood Comm Zone	BRSAWS360D-698/1710-2-T0-D
Milton Rd	W006624	MSL	Galtronics 14.5" X 24" (P5622)
Philips Ln	N/A	New	dbSpectra 48 x 8
Dead End	N/A	New	dbSpectra 48 x 8
Hammond Rd	W11S	Wood Pole Top	dbSpectra 48 x 8
Old Post Rd	W18	Wood Pole Top	dbSpectra 48 x 8
Hammond Rd	T47 S	Wood Pole Top	dbSpectra 48 x 8
Mendota Ave	NYT3	Wood Pole Top	dbSpectra 48 x 8
Summit Ave	29	Wood Pole Top	dbSpectra 48 x 8
Maple Ave	NYT21	Wood Pole Top	dbSpectra 48 x 8
Mistletoe Ln		Wood Pole Top	dbSpectra 48 x 8
School St	W5	Wood Pole Top	dbSpectra 48 x 8
Midland Ave	N/A	Wood Pole Top	dbSpectra 48 x 8

New St	17990	Wood Pole Top	dbSpectra 48 x 8
Iroquois St	P5	Wood Pole Top	dbSpectra 48 x 8
Ridgewood Dr	W12	Wood Pole Top	dbSpectra 48 x 8
Club Rd	NYT1	Wood Pole Top	dbSpectra 48 x 8
Boston Post Rd	NYT 1	Wood Pole Top	dbSpectra 48 x 8
Parkway Dr	3701	Wood Pole Top	dbSpectra 48 x 8
Morehead Dr	NYT 6	Wood Pole Top	dbSpectra 48 x 8
Sonn Dr	NYT 1	Wood Pole Top	dbSpectra 48 x 8
Coolidge Ave	NYT16	Wood Pole Top	dbSpectra 48 x 8
Hughes Ave	NYT 1	Wood Pole Top	dbSpectra 48 x 8
Crescent Ave	T4	Wood Pole Top	dbSpectra 48 x 8
Fraydun Pl	NYT 2	Wood Pole Top	dbSpectra 48 x 8
Rye Beach Ave	NYT 58S	Wood Pole Top	dbSpectra 48 x 8
Oakwood Ave	8	Wood Pole Top	dbSpectra 48 x 8
Elmwood Ave	W57	Wood Pole Top	dbSpectra 48 x 8
Fullerton Pl	4	Wood Pole Top	dbSpectra 48 x 8
Griffon Pl	N/A	Wood Pole Top	dbSpectra 48 x 8
Mildred Ave	9	Wood Pole Top	dbSpectra 48 x 8
Helen Ave	W4	Wood Pole Top	dbSpectra 48 x 8
Riverside View Ln	N/A	Wood Pole Top	dbSpectra 48 x 8
Hillside Pl	NYT 3	Wood Pole Top	dbSpectra 48 x 8
Oakland Beach Ave	7	Wood Pole Top	dbSpectra 48 x 8
Rose St	26A	Wood Pole Top	dbSpectra 48 x 8
Dead End	8	Wood Pole Top	dbSpectra 48 x 8
Fairway Ave	4	Wood Pole Top	dbSpectra 48 x 8
Forest Ave	N/A	Wood Pole Top	dbSpectra 48 x 8
Stuyvesant Ave	4	Wood Pole Top	dbSpectra 48 x 8
Forest Ave	6	Wood Pole Top	dbSpectra 48 x 8
Hickory Dr	5	Wood Pole Top	dbSpectra 48 x 8
Van Wagenen Ave	W14 L33(	Wood Pole Top	dbSpectra 48 x 8

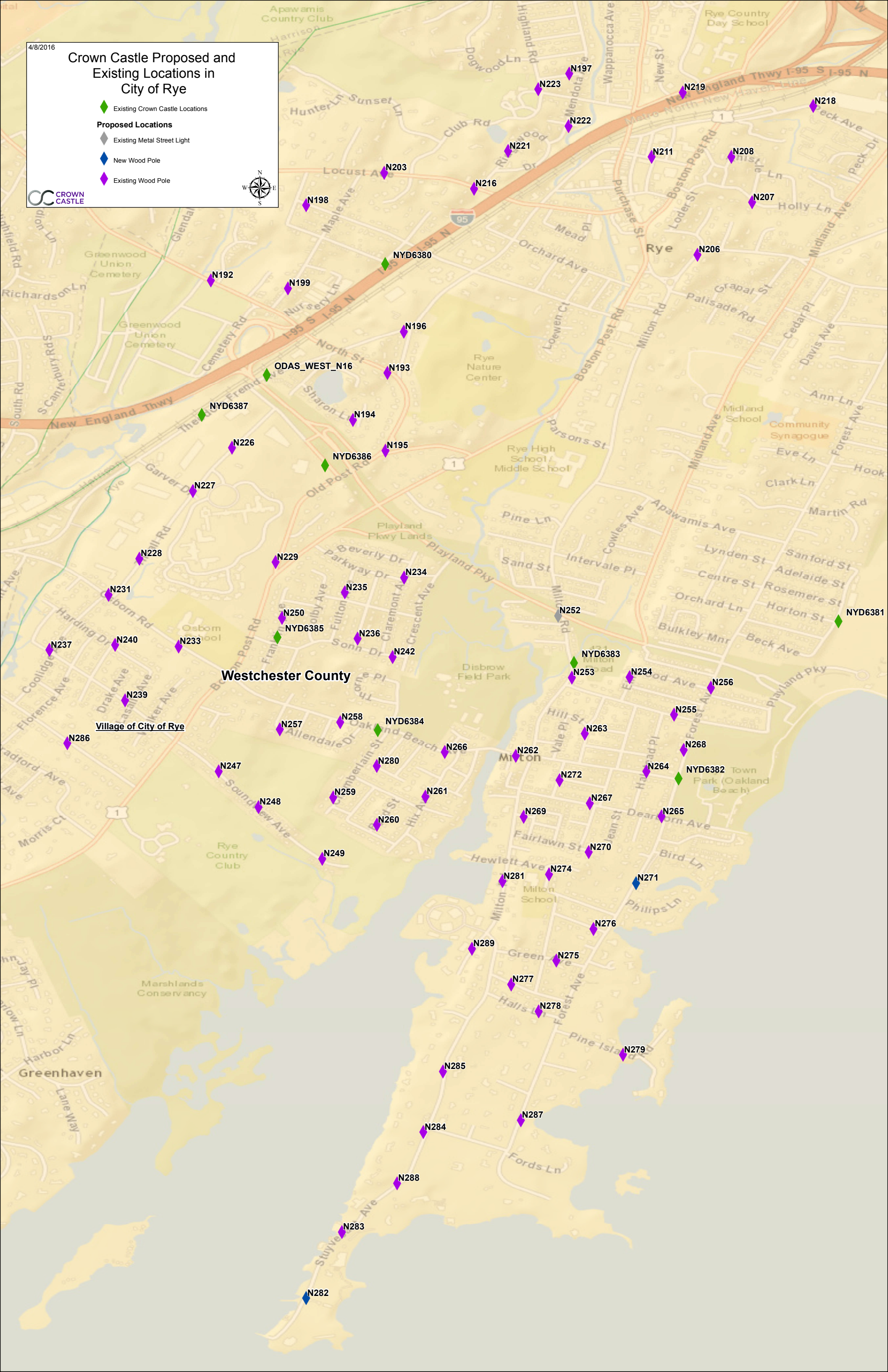
4/8/2016
Crown Castle Proposed and Existing Locations in City of Rye
Existing Crown Castle Locations
Proposed Locations
Existing Metal Street Light
New Wood Pole
Existing Wood Pole
CROWN CASTLE
N
W
E
S
N197
N223
N219
N218
N222
N221
N211
N208
N203
N216
N207
N198
NYD6380
N206
N192
N199
N196
ODAS_WEST_N16
N193
NYD6387
N194
N226
N195
NYD6386
N227
N228
N229
N234
N231
N235
N250
NYD6385
N236
N237
N240
N233
N242
Westchester County
N239
Village of City of Rye
N286
N257
N258
NYD6384
N266
N262
N280
N247
N259
N261
N248
N260
N249
N252
NYD6381
NYD6383
N253
N254
N256
N255
N263
N268
N264
NYD6382
N272
N267
N269
N265
N270
N274
N281
N271
N276
N289
N275
N277
N278
N279
N285
N287
N284
N288
N283
N282

Existing Crown Castle Locations in the City of Rye

Location ID	Latitude	Longitude	Location Address	Installation Type
NYD6382	40.961369	-73.682507	Across from 594 Forest Ave	Pole Top
NYD6384	40.963170	-73.693739	138 Oakland Beach Ave	Pole Top
NYD6383	40.965694	-73.686414	Side of 411 Milton Rd (50ft South)	Pole Top
NYD6385	40.966648	-73.697485	36 Franklin Ave	Pole Top
NYD6381	40.967238	-73.676533	Across from 52 Roosevelt Ave	Pole Top
NYD6386	40.973074	-73.695710	120 Old Post Rd	Pole Top
NYD6387	40.974950	-73.700310	Across from 401 Theodore Fremd Ave	Comm Zone
NYD6380	40.980584	-73.693459	2 Clinton Ave	Pole Top

Existing Crown Castle Deployments in the City of Rye

NYD6387 Comm Zone Installation - Across from 401 Theodore Fremd Ave

NYD6387 Comm Zone Installation - Across from 401 Theodore Fremd Ave

NYD6383 Pole Top Installation - Side of 411 Milton Rd (50ft South)

NYD6383 Pole Top Installation - Side of 411 Milton Rd (50ft South)

NYD6382 Pole Top Installation - Across from 594 Forest Ave

NYD6382 Pole Top Installation - Across from 594 Forest Ave

CITY COUNCIL AGENDA

NO. 9 DEPT.: City Council DATE: May 11, 2016

CONTACT: Mayor Joseph A. Sack

AGENDA ITEM: Consideration of Resolution establishing a new policy for grievance filings for current and former City employees, Rye City Officials, and members of the Board of Assessment Review.

FOR THE MEETING OF:
May 11, 2016

RYE CITY CODE,
CHAPTER
SECTION

RECOMMENDATION: That the Council consider a Resolution establishing a new policy for grievance filings for City employees, Rye City Officials, and members of the Board of Assessment Review.

IMPACT: ☐ Environmental ☐ Fiscal ☐ Neighborhood ☐ Other:

BACKGROUND:

See attached Resolution.

CITY COUNCIL OF THE CITY OF RYE

RESOLUTION ESTABLISHING A NEW POLICY FOR FILING GRIEVANCES FOR CURRENT AND FORMER CITY EMPLOYEES, RYE CITY OFFICIALS, AND MEMBERS OF THE BOARD OF ASSESSMENT REVIEW

WHEREAS, every year numerous City of Rye property owners avail themselves of the opportunity under the law to file grievances and small claims court petitions seeking reductions to their property tax assessments; and

WHEREAS, City of Rye employees, City of Rye Council members, and City of Rye Board of Assessment Review members are not precluded from filing such grievances or petitions; and

WHEREAS, New York State Real Property Tax Law Section 523 already provides that the City of Rye may request another municipality to handle the grievance or petition of a current City of Rye Board of Assessment Review member, upon the execution of an inter-municipal agreement; and

WHEREAS, the City of Rye has an interest in avoiding any possible conflict of interest issues and in avoiding even the appearance of impropriety with regard to such grievances and petitions; therefore

BE IT RESOLVED, that it is now and hereafter the policy of the City of Rye to request another municipality to handle the grievance or petition of any current or former City of Rye Board of Assessment Review member, as well as any current or former Rye City employee, and any current or former Rye City Council member, upon the execution of an inter-municipal agreement; and

BE IT FURTHER RESOLVED, that this policy applies to any residential or commercial property interest within the boundaries of the City of Rye; and

BE IT FURTHER RESOLVED, that the City of Rye will set forth the terms of any necessary cost or fee reimbursement to the municipality as part of the inter-municipal agreement.