Site Alterations to:

Disbrow Park and the former Rye Nursery Site

City of Rye
Rye, New York

List of Drawings:

LANDSAPE
- TS1 - Rye Nursery Survey
- TS1 - Disbrow Park Survey
- L10 - Rye Nursery Site Layout and Grading Plan
- L11 - Rye Nursery Site Utility Plan
- L12 - Rye Nursery Soil Erosion and Sediment Control Plan
- L13 - Rye Nursery Site Planting Plan
- L14 - Rye Nursery Irrigation Plan
- L15 - Not Used
- L16 - Rye Nursery Toilet Rooms
- L17 - Rye Nursery Toilet Rooms, Wall Sections and Details
- L18 - Rye Nursery Structural Plans and Details
- L19 - Not Used
- L20 - Disbrow Park Site Layout and Grading Plan - Area 'A'
- L21 - Disbrow Park Site Utility Plan - Area 'A'
- L22 - Disbrow Park Soil Erosion and Sediment Control Plan - Area 'A'
- L23 - Disbrow Park Planting Plan - Area 'A'
- L24 - Disbrow Park Irrigation Plan
- L25 - Not Used
- L26 - Disbrow Park Storage
- L30 - Site Details
- L-31 - Site Details

ELECTRIC
- E10 - Electric Work Site Plan, Toilet Room Power, Lighting and HVAC Plans, Details and Schedules.
- E20 - Electric Work Site Plan, Irrigation Shed Power and Lighting Plans, Details, Motor Conn., Light Fixture and Panel Schedules.

PLUMBING
- P10 - Plumbing Plan

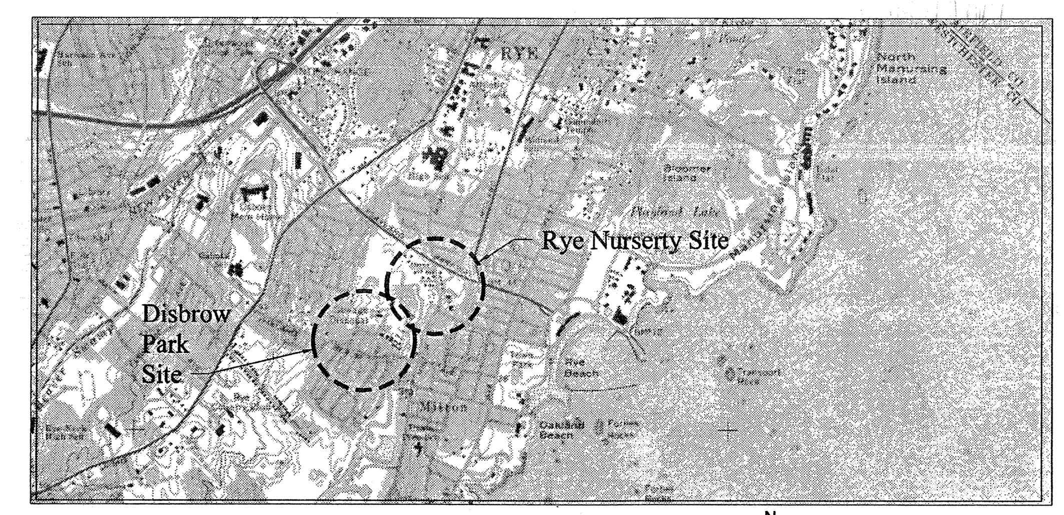

Project Location Map

N

Site Symbols

- 83.36 SPOT ELEVATION
- 99.50 TC / 99.00 BC TOP OF CURB ELEVATION / BOTTOM OF CURB ELEVATION
- 83.36 EXISTING SPOT ELEVATION
- 136 CONTOUR
- 136 EXISTING CONTOUR
- TB-1 SOIL TEST BORING
- TP-1 TEST PIT LOCATION
- TREE OR SHRUB
- TREE OR SHRUB TO REMAIN
- TREE OR SHRUB TO BE REMOVED
- ASPHALT PAVING OR TOP COURSE
- HEAVY-DUTY ASPHALT PAVING
- REMOVE AND REPLACE ASPHALT PAVING
- CONCRETE PAVING
- CONCRETE SECTION
- CURBING
- CURBING TO REMAIN
- CURBING TO BE REMOVED
- FENCING
- FENCING TO REMAIN
- FENCING TO BE REMOVED
- SILT FENCING
- TEMPORARY CONSTRUCTION FENCING
- HAY BALES
- TEMPORARY TREE PROTECTION
- UTILITY POLE
- UTILITY POLE TO REMAIN
- UTILITY POLE TO BE REMOVED
- NEW OR RELOCATED FIRE HYDRANT
- FIRE HYDRANT TO REMAIN
- DROP INLET
- CATCH BASIN
- STORM/SANITARY MANHOLE
- DROP INLET TO REMAIN
- MANHOLE/CATCH BASIN/DRYWELL TO REMAIN
- DRYWELL W/ GRATE
- DRYWELL W/ SOLID COVER TO GRADE
- DRYWELL W/ COVER BURIED
- ST STORM LINE WITH HEADWALL
- ST STORM LINE WITH ENDWALL
- ST STORM LINE WITH END SECTION
- ST STORM PIPE
- ST STORM PIPE TO REMAIN
- ST STORM PIPE TO BE REMOVED/ABANDONED
- UD UNDERDRAIN
- UD UNDERDRAIN TO REMAIN
- UD UNDERDRAIN TO BE REMOVED/ABANDONED
- SAN SANITARY LINE
- SAN SANITARY LINE TO REMAIN
- SAN SANITARY LINE TO BE REMOVED/ABANDONED
- G GAS LINE
- G GAS LINE TO REMAIN
- G GAS LINE TO BE REMOVED/ABANDONED
- W WATER LINE
- W WATER LINE TO REMAIN
- W WATER LINE TO BE REMOVED/ABANDONED
- CO STORM/SANITARY CLEANOUT
- GATE VALVE
- SIGN POST
- UNIVERSAL HANDICAP SYMBOL
- REMOVAL
- RIP-RAP

Architectural Symbols

- EXISTING TO REMAIN
- DEMOLITION WORK
- NEW WORK IN EXISTING (MATERIAL INDICATION VARIES)
- NEW WORK (MATERIAL INDICATION VARIES)
- CMU & BRICK CAVITY WALL
- CMU WALL
- GYPSUM BOARD PARTITION W/ METAL STUD WALL
- GYPSUM BOARD PARTITION W/ WOOD STUD WALL
- OPERABLE PARTITION
- 100 DOOR NUMBER (ROOM NO. W/ DOOR NO.)
- A WINDOW TYPE
- 123 WINDOW NUMBER (ROOM NO. W/ WINDOW NO.)
- EQUIPMENT, FURNITURE, OR CASEWORK NUMBER
- 126 RELOCATED EQUIPMENT FURNITURE OR CASEWORK NUMBER
- P3.8 PARTITION TYPE

ROOF SYMBOLS
- ROOF EXHAUST OR GRAVITY VENT
- HVAC HEATING/VENTILATING OR AC EQUIPT
- MASONRY CHIMNEY
- SL SCUTTLE
- SKYLIGHT
- HOT FLUE
- PLUMBING VENT
- SCUPPER
- GUTTER
- PARAPET WALL
- ROOF DRAIN IN NEW LOCATION
- ROOF DRAIN REPLACING EXISTING
- EXISTING ROOF DRAIN
- EXISTING ROOF DRAIN TO BE REMOVED
- EJ ROOF EXPANSION JOINT

REFLECTED CEILING SYMBOLS
- 9'-0" BOTTOM OF CEILING A.F.F.
- CEILING HUNG UNIT VENTILATOR OR CABINET HEATER
- CEILING GRILLE
- CEILING DIFFUSER
- EXIT LIGHT
- EM EMERGENCY LIGHT
- 2 x 4 FIXTURE IN 2 X 2 PATTERN

Structural Symbols

- INDICATES AREA IS EXISTING
- INDICATES SLAB IS DEPRESSED OR RECESSED
- CONTINUOUS FTG
- ANCHOR BOLTS
- FOUNDATION WALL
- <97'-8> BM OR COL POCKET
- [96'-8] [97'-8] BOTTOM OF FTG ELEVATION
- FOUNDATION WALL UNDER SLAB
- STEPPED FOOTING
- (99'-4) TOP OF PIER ELEVATION
- P1 INDICATES PIER TYPE REFER TO PIER SCHEDULE
- F4 INDICATES FOOTING TYPE REFER TO FOOTING SCHEDULE
- [97'-8] BOTTOM OF FOOTING ELEVATION
- 98'-6" INDICATES ROUGH GRADING ELEVATION WITHIN THE BUILDING AREA. SLOPE GRADES UNIFORMLY BETWEEN ELEVATIONS. CUT FOOTING INTO THIS GRADING

Heating and Plumbing Symbols

- RD INDICATES A FRAMED ROOF OR FLOOR OPNG COORD SIZE AND LOCATION
- INDICATES FRAMED OPNG IS FOR: RD = ROOF DRAIN, ME = MECH EQUIP, SL = SKYLIGHT, SH = SMOKE HATCH, AH = ACCESS HATCH
- ELEVATION FROM DRAWING DATUM
- NUMBER OF SHEAR STUDS OVER FULL LENGTH OF BEAM
- BEAM SIZE
- (-6) [14] W8X15 (GIR) INDICATES TOP OF BEAM @ ADJ. GIRDER ELEV.
- END REACTION (KIPS)
- DEFLECTION (INCHES) (APPROX W/WET CONC)
- L-2 LINTEL DESIGNATION SEE SCHEDULE
- INDICATES LINTEL CONNECTION TO COLUMN
- INDICATES MEMBER IS EXISTING
- INDICATES MOMENT CONNECTION
- INDICATES BEAM FRAMES OVER COLUMN
- INDICATES SHEAR WALL CONNECTION TO BEAM
- INDICATES BEAM TO HAVE TOP OF WALL CLIPS
- 12K3 JOIST DESIGNATION
- JOIST
- BRIDGING
- MASONRY LOAD BEARING WALL
- SHEAR WALL SEE SCHEDULE
- CFMF BEARING WALL
- INDICATES X- BRACING
- SHOCK ABSORBER
- SHOCK ABSORBER W/ BALL VALVE
- CLEANOUT PLUG
- CODP CLEANOUT DECK PLATE
- FIRE HYDRANT
- EXG FIRE HYDRANT
- FIRE HYDRANT (FE) WALL HOOK
- F FIRE RISER VALVE ASSEMBLY
- BOTTOM PIPE CONNECTION
- TOP PIPE CONNECTION
- PIPE ELBOW DOWN
- PIPE ELBOW UP
- PIPE DOWN WITH CLEANOUT AT BASE
- PIPE DOWN WITH SHUTOFF VALVE
- CAP OR PLUG
- UNION CONNECTION
- PIPING REDUCER (CONCENTRIC)
- PIPING REDUCER (ECCENTRIC)
- PIPE ANCHOR
- PIPE GUIDE
- EXPANSION COMPENSATOR W/ EXPANSION GUIDES
- FLEX CONNECTOR
- TEMPERATURE OR PRESSURE PROBE WELL
- THERMOMETER
- P PRESSURE GAUGE
- P PRESSURE SWITCH
- PRESSURE/TEMPERATURE (PETE'S PLUG)
- V MANUAL AIR VENT
- AV AUTOMATIC AIR VENT
- F FLOW SWITCH
- M FLOW METER
- ORIFICE METER
- VACUUM BREAKER
- STRAINER
- STRAINER WITH BLOW DOWN VALVE
- STRAINER (DUPLEX)
- A AQUASTAT
- D PITCH PIPING (DOWN)
- DIRECTION OF FLOW
- POC POINT OF CONNECTION
- AUTOMATIC FLOW CONTROL VALVE
- BACKFLOW PREVENTOR
- B BALANCING VALVE
- BALL VALVE
- BUTTERFLY VALVE
- CHECK VALVE
- 2-WAY CONTROL MODULATING VALVE
- 3-WAY CONTROL, THERMOSTATIC MIXING VALVE
- S SOLENOID (ELECTRIC) ON/OFF
- FUSIBLE LINK VALVE
- GAS PRESSURE REGULATOR VALVE
- GATE VALVE
- EXG SHUTOFF VALVE
- GLOBE VALVE
- OS&Y GATE VALVE
- PLUG VALVE
- PRESSURE REDUCING VALVE
- T & P RELIEF VALVE
- STEAM TRAP
- AIR SEPARATOR
- CIRCULATING PUMP
- EXG PIPING TO BE REMOVED OR ABANDONED AS NOTED
- CONNECTION TO EXISTING PIPING
- ROOF DRAIN REPLACING EXG
- ROOF DRAIN
- EXG PLUMBING FIXTURE TO BE REMOVED
- EXG PLUMBING FIXTURE
- PLUMBING FIXTURE
- FIRE EXTINGUISHER CABINET W/ EXTINGUISHER
- FIRE HOSE CABINET
- UPRIGHT SPRINKLER HEAD
- PENDANT SPRINKLER HEAD
- CONCEALED SPRINKLER HEAD
- RECESSED SPRINKLER HEAD
- SIDEWALL SPRINKLER HEAD
- FIRE DEPARTMENT CONNECTION
- STANDARD BRANCH DUCT W/VOLUME DAMPER
- FLEXIBLE CONNECTION
- ACOUSTICALLY LINED DUCTWORK
- FLEXIBLE DUCT
- VOLUME DAMPER
- FD FIRE DAMPER
- SD SMOKE DAMPER
- FSD FIRE AND SMOKE DAMPER
- AAD AUTOMATIC AIR DAMPER
- EXISTING DUCTWORK
- REMOVE EXISTING DUCT OR MECHANICAL EQUIPMENT
- AIR FLOW
- DUCT AIR FLOW
- EXHAUST FAN
- ROOFTOP HOOD

Standard Symbols

- 1 / A7 STANDARD REFERENCE BUBBLE — DETAIL NUMBER — DRAWING NUMBER
- 1 **Floor Plan** 1/8" = 1'-0" DRAWING TITLE & SCALE
- 2 / A6 BUILDING SECTION
- 1 / A7 WALL SECTION
- 2 / A4 EXTERIOR ELEVATION
- 2 / A4 INTERIOR ELEVATION
- 1, 2, 3, 4 / A5 INTERIOR ELEVATION
- 2 / A12 DETAIL
- CLASSROOM 100 ROOM NAME AND NUMBER
- NORTH ARROW
- CLL CONTRACT LIMIT LINE
- PROPERTY LINE
- A COLUMN CENTER LINE
- CUT LINE
- A / B MATCH LINE
- CENTER LINE
- 100'-0" 1st F.F. ELEVATION IN RELATION TO BENCHMARK
- 5 DRAWING REVISION NUMBER
- EARTH
- GRAVEL
- SAND
- CONCRETE
- NEW ASPHALT PAVING OR TOP COURSE
- NEW HEAVY-DUTY ASPHALT PAVING
- REMOVE AND REPLACE ASPHALT PAVING
- CONCRETE MASONRY UNITS
- BRICK
- STONE
- METAL, STEEL
- PLYWOOD
- FINISHED WOOD TRIM
- ROUGH WOOD
- INSULATION (LOOSE OR BATT)
- RIGID INSULATION
- CERAMIC TILE
- ACOUSTICAL PANEL
- GLASS (LARGE SCALE)
- PLASTER, CEMENT, GROUT GYPSUM WALL BOARD
- RESILIENT FLOORING
- TERRAZZO
- STRUCTURAL GLAZED TILE

Abbreviations

NOTE: REFER TO FINISH PLANS FOR ROOM FINISH KEY

AAC	ASBESTOS ABATEMENT CONTRACTOR
AAD	AUTOMATIC AIR DAMPER
AB	ANCHOR BOLT
AC	AIR CONDITIONING, ALTERNATING CURRENT
ACCMP	ASPHALT COATED CORR. METAL PIPE
ACM	ASBESTOS CONTAINING MATERIAL
ACT	ACOUSTICAL CEILING TILE
ACU	AIR CONDITIONING UNIT
AD	AREA DRAIN
ADA	AMERICAN DISABILITIES ACT
ADD	ADDENDUM
ADDL	ADDITIONAL
ADH	ADHESIVE
ADJ	ADJACENT
ADR	ACCESS DOOR
AESS	ARCH. EXPOSED STRUCTURAL STEEL
AFF	ABOVE FINISH FLOOR
AH	ACCESS HATCH
AHU	AIR HANDLING UNIT
AIB	AIR INFILTRATION BARRIER
ALT	ALTERNATE
ALTN	ALTERATION
ALUM	ALUMINUM
AMP	AMPERE
ANOD	ANODIZED
ANT	ACID NEUTRALIZATION TANK
AP	ACCESS PANEL
APPROX	APPROXIMATE (LY)
ARCH	ARCHITECT (URAL)
ASB	ASBESTOS
ASPH	ASPHALT
ATV	ATMOSPHERIC VENT
AUTO	AUTOMATIC
AV	ACID VENT
AVE	AVERAGE
AVTR	ACID VENT THRU ROOF
AW	ACID WASTE
B	BOILER, BRICK, BOTTOM
BBD	BOILER BLOWDOWN
BC	BOTTOM OF CURB
BD	BOARD
BDD	BACKDRAFT DAMPER
BOF	BOTTOM OF FOOTING
BFP	BACK FLOW PREVENTER
BG	BOTTOM GRILLE
BIT	BITUMINOUS
BLDG	BUILDING
BLK	BLOCK
BLKG	BLOCKING
BM	BEAM
BO	BY OTHERS
BOD	BOTTOM OF DUCT
BOS	BOTTOM OF STEEL
BOT	BOTTOM
BPL	BEARING PLATE
BR	BOTTOM REGISTER
BRDG	BRIDGING
BRG	BEARING
BRK	BRICK
BRZ	BRONZE
BRSH	BRICKSHELF
BS	BOTH SIDES, BOTTOM OF STAIR
BSMT	BASEMENT
BSPL	BACKSPLASH
BT	BENT
BTU	BRITISH THERMAL UNITS
BUR	BUILT-UP ROOFING
BW	BOTTOM OF WALL
BWC	BACK WATER CHECK VALVE
C	CONDUIT, CONVECTOR, CARPET
CA	COMPRESSED AIR
CAB	CABINET
CATV	CABLE TELEVISION
CB	CATCH BASIN, CIRCUIT BREAKER
CBD	CHALKBOARD
CCTV	CLOSED CIRCUIT TELEVISION
CD	CEILING DIFFUSER
CEM	CEMENT
CER	CERAMIC
CFM	CUBIC FEET PER MINUTE
CFMF	COLD FORMED METAL FRAMING
CFT	CERAMIC FLOOR TILE
CG	CEILING GRILLE
CH	CABINET HEATER
CHAN	CHANNEL
CHUV	CEILING HUNG UNIT VENTILATOR
CI	CAST IRON
CIP	CAST IN PLACE
CIRC	CIRCUMFERENCE
CJ	CONTROL JOINT
CL	CENTER LINE
CLG	CEILING
CLKG	CAULKING
CLL	CONTRACT LIMIT LINE
CLR	CLEAR (ING)
CLRM	CLASSROOM
CMP	CORRUGATED METAL PANEL
CMT	CERAMIC MOSAIC TILE
CMU	CONCRETE MASONRY UNIT
CO	CLEAN OUT
CODP	CLEAN OUT DECK PLATE
COL	COLUMN
COMB	COMBINATION
COMP	COMPRESS (ED) (ION) (IBLE), COMPOSITE
CONC	CONCRETE
COND	CONDENSATE (HEATING AND VENTILATING)
CONN	CONNECTION
CONST	CONSTRUCTION
CONT	CONTINOUS
CONTR	CONTRACT (OR)
COORD	COORDINATE
CORR	CORRUGATED
COWP	CLEAN OUT WALL PLATE
CPVC	CHLORINATED POLY VINYL CHLORIDE
CR	CEILING REGISTER
CRS	COURSE (S)
CSK	COUNTERSINK
CSMT	CASEMENT
CT	COMPUTER TERMINAL, CERAMIC BASE TILE
CTOP	COUNTER TOP
CTD	COATED
CTR	CENTER
CU	CUBIC
CUH	CABINET UNIT HEATER
CV	CONVECTOR, CURB VALVE
CW	COLD WATER
CWR	CHILLED WATER RETURN
CWS	CHILLED WATER SUPPLY
CWT	CERAMIC WALL TILE
D	DIESEL FUEL, DEPTH
DC	DIRECT CURRENT
DDC	DIRECT DIGITAL CONTROL
DE	DEIONIZED WATER
DEG	DEGREES
DEMO	DEMOLISH
DEP	DEPRESS (ED) (ION)
DET	DETAIL
DF	DRINKING FOUNTAIN
DH	DOUBLE HUNG
DI	DISTILLED WATER, DROP INLET, DUCTILE IRON
DIA	DIAMETER
DIAG	DIAGONAL
DIM	DIMENSION
DISP	DISPENSER
DIST	DISTANCE
DIV	DIVISION
DL	DEAD LOAD
DMBD	DRY MARKER BOARD
DN	DOWN
DO	DITTO
DP	DAMPPROOF (ING)
DPR	DAMPER
DR	DOOR, DEEP RIB
DWG	DRAWING
DS	DOWNSPOUT, DRAINAGE STRUCTURE
DT	DRAIN TILE
DTA	DOVETAIL ANCHOR
DTL	DETAIL
DW	DUMBWAITER, DISHWASHER
DWL	DOWEL
DWR	DRAWER
E	EAST
EA	EXHAUST AIR, EACH
EAT	ENTERING AIR TEMPERATURE
EB	EXPANSION BOLT
EC	ELECTRICAL CONTRACTOR
EF	EACH FACE
EJ	EXPANSION JOINT
ELEC	ELECTRIC (AL)
ELEV	ELEVATION, ELEVATOR
EM	EMERGENCY
EMT	ELECTRICAL METALLIC TUBING
ENC	ENCLOSURE
EOD	EDGE OF DECK
EOS	EDGE OF SLAB
EQ	EQUAL, EQUIVALENT
EQC	EQUIPMENT CONTRACTOR
EQUIP	EQUIPMENT
ES	EXPOSED SURFACE
ESF	ELASTIC SHEET FLASHING
ESM	ELASTIC SHEET MEMBRANE
EW	EACH WAY
EWC	ELECTRIC WATER COOLER
EWT	ENTERING WATER TEMPERATURE
EXH	EXHAUST
EXG	EXISTING
EXP	EXPANSION
EXT	EXTERIOR, EXTERNAL
F	FAHRENHEIT
FA	FIRE ALARM
FAI	FRESH AIR INTAKE
FCU	FAN COOLING UNIT
FD	FLOOR DRAIN, FIRE DAMPER
FDC	FIRE DEPARTMENT CONNECTION
FE	FIRE EXTINGUISHER
FEC	FIRE EXTINGUISHER CABINET
FF	FINISH FLOOR, FACTORY FINISH
FFE	FINISH FLOOR ELEVATION
FFL	FINISH FLOOR LINE
FH	FIRE HYDRANT
FHC	FIRE HOSE CABINET
FIN	FINISH (ED)
FIXT	FIXTURE
FL	FLUSH
FLD	FLOOR DUCT
FLEX	FLEXIBLE
FLG	FLASHING
FLR	FLOOR (ING)
FLUOR	FLUORESCENT
FM	FLOOR MOUNTED
FND	FOUNDATION
FOG	FUEL OIL GAUGE
FOR	FUEL OIL RETURN
FOS	FUEL OIL SUPPLY
FP	FIREPROOF (ING)
FPM	FEET PER MINUTE
FR	FRAME
FRA	FRESH AIR
FRC	FIRE RESISTANT COATING
FRP	FIBERGLASS REINFORCED PANEL
FRT	FIRE RETARDANT
FR	FLOOR SINK
FRD	FIRE AND SMOKE DAMPER
FT	FEET
FTG	FOOTING
FTR	FIN TUBE RADIATION
FV	FLUSH VALVE
G	GAS
GA	GAUGE
GAL	GALLON
GALV	GALVANIZED
GASK	GASKET (ED)
GC	GENERAL CONTRACT (OR)
GCO	GRADE CLEANOUT
GCMU	GLAZED CONCRETE MASONRY UNIT
GF	GROUND FACE
GL	GLASS, GLAZING
GND	GROUND
GPM	GALLONS PER MINUTE
GR	GRADE (ING), GLYCOL RETURN
GS	GLYCOL SUPPLY
GVL	GRAVEL
GWB	GYPSUM WALL BOARD
GYP	GYPSUM
H	HEIGHT
HB	HOSE BIB
HBD	HARD BOARD
HC	HEATING CONTRACT (OR), HANDICAP
HCR	HOT/CHILLED RETURN
HCS	HOT/CHILLED SUPPLY
HD	HEAVY DUTY
HDPE	HIGH DENSITY POLYETHYLENE
HDR	HEADER
HDW	HARDWARE
HM	HOLLOW METAL
HORZ	HORIZONTAL
HP	HORSEPOWER, HIGH PRESSURE
HPL	HIGH PRESSURE LAMINATE
HR	HANDRAIL, HOUR
HT	HEIGHT
HTG	HEATING/VENTILATING/AIR CONDITIONING
HVAC	
HVU	HEATING AND VENTILATING UNIT
HW	HOT WATER
HWH	HOT WATER HEATER
HWP	HOT WATER PUMP
HWR	HOT WATER RETURN
HWS	HOT WATER SUPPLY
HV	HIGH VOLTAGE
ID	INSIDE DIAMETER
IE	INVERT ELEVATION
IN	INCHES
INCL	INCLUDE (D) (ING)
INS	INSULATE (D) (ION)
INT	INTERIOR
INV	INVERT
IP	IRON PIPE
IPS	IRON PIPE SIZE
IW	INDIRECT WASTE
J	JANITORS CLOSET
JAN	JANITORS CLOSET
JB	JUNCTION BOX
JC	JANITORS CLOSET
JCT	JUNCTION
JT	JOINT
KW	KILOWATT
KV	KILOVOLT
KVA	KILOVOLT AMPERE
L	LENGTH, LONG
LAB	LABORATORY
LAD	LADDER
LAM	LAMINATE (D)
LAT	LEAVING AIR TEMPERATURE
LAV	LAVATORY
LB	POUND
LBL	LABEL
LC	LANDSCAPE CONTRACTOR (SITE)
LCC	LEAD COATED COPPER
LDR	LEADER
LEV	LEVEL
LF	LINEAR FOOT
LG	LENGTH, LONG
LGI	LARGE GROUP INSTRUCTION
LH	LEFT HAND
LIN	LINEAR
LKR	LOCKER
LL	LIVE LOAD
LP	LOW PRESSURE
LPT	LOW POINT
LT	LIGHT
LTL	LINTEL
LV	LOW VOLTAGE
LVR	LOUVER
LWT	LEAVING WATER TEMPERATURE
MAN	MANUAL
MAS	MASONRY
MAT	MATERIAL
MAU	MAKE UP AIR UNIT
MAX	MAXIMUM
MBH	THOUSAND BTUH
MBR	MEMBER
MD	MOTORIZED DAMPER
MECH	MECHANICAL
MED	MEDIUM
ME	MECHANICAL EQUIPMENT
MEMB	MEMBRANE
MEZZ	MEZZANINE
MF	MIXING FAUCET
MFR	MANUFACTURE (R)
MH	MAN HOLE
MIN	MINIMUM
MIR	MIRROR
MISC	MISCELLANEOUS
MO	MASONRY OPENING
MOD	MODULE (OR), MODEL
MR	MOP RECEPTOR
MT	MOUNT
MTD	MOUNTED
MTG	MOUNTING
MTL	METAL
MTH	MARBLE THRESHOLD
MTR	METER
MULL	MULLION
MVEJ	MASONRY VENEER EXPANSION JOINT
N	NORTH
NAT	NATURAL
NC	NORMALLY CLOSED
NEC	NATIONAL ELECTRIC CODE
NEG	NEGATIVE
NEUT	NEUTRALIZATION
NIC	NOT IN CONTRACT
NO	NUMBER, NORMALLY OPEN
NOM	NOMINAL
NRC	NOISE REDUCTION COEFFICIENT
NTS	NOT TO SCALE
OA	OVERALL, OUTSIDE AIR
OC	ON CENTER
OD	OUTSIDE DIAMETER
OH	OVERHEAD
OPNG	OPENING
OPP	OPPOSITE
OPP HD	OPPOSITE HAND
P	PAINT
PAR	PARRALLEL
PART	PARTITION
PC	PLUMBING CONTRACT (OR)
PCC	PRECAST CONCRETE
PE	PORCELAIN ENAMEL
PERF	PERFORATE (ION) (ED)
PERI	PERIMETER
PL	PLATE, PROPERTY LINE
PLAM	PLASTIC LAMINATE
PLAS	PLASTER, PLASTIC
PLF	POUNDS PER LINEAR FOOT
PLYWD	PLYWOOD
PM	PLUGMOLD
PNL	PANEL
POC	POINT OF CURVATURE, POINT OF CONNECTION
POL	POLISHED
POS	POSITIVE
POT	POINT OF TANGENCY
PR	PAIR
PRE	POWER ROOF EXHAUSTER
PREP	PREPARE (ATION)
PRF	PREFORMED
PROJ	PROJECT
PS	PAINT EXPOSED STRUCTURE
PSF	POUNDS PER SQUARE FOOT
PSI	POUNDS PER SQUARE INCH
PT	POINT
PTD	PAINTED
PTP	PRESSURE TREATED PRESERVATIVE
PTFR	PRESSURE TREATED FIRE RETARDANT
PVC	POLYVINYL CHLORIDE
PVMT	PAVEMENT
PWE	POWER WALL EXHAUSTER
QT	QUARRY TILE
R	RISER, RADIUS, RUBBER FLOORING
RB	RESILIENT BASE
RR	REMOVE EXISTING AND REPLACE WITH NEW
RA	RETURN AIR
RAD	RADIATION
RAF	RETURN AIR FAN
RC	ROOFING CONTRACT (OR)
RCA	RECYCLED CONCRETE AGGREGATE
RCP	REINFORCED CONCRETE PIPE
RD	ROOF DRAIN
RECEPT	RECEPTACLE
REF	REFERENCE
REFL	REFLECT (ED) (IVE) (OR)
REFR	REFRIGERATOR
REG	REGISTER
REINF	REINFORCE (D) (ING)
REM	REMOVE
REQD	REQUIRED
RESIL	RESILIENT
RET	RETAINING, RETURN
REV	REVISION, REVISED
RFG	ROOFING
RFH	ROOF HATCH
RFM	RECESSED FLOOR MAT
RGS	RIGID GALVANIZED STEEL
RH	RIGHT HAND
RHC	REHEAT COIL
RI	ROUGH-IN
RL	RAIN LEADER
RLG	RAIL (ING)
RM	ROOM
RNT	RUNNING TRAP
RO	ROUGH OPENING
ROW	RIGHT OF WAY
RPM	REVOLUTIONS PER MINUTE
RTH	ROOF TOP HOOD
RTU	ROOF TOP UNIT
RW	RAW WATER
S	SOUTH
SA	SUPPLY AIR
SAN	SANITARY
SAS	SMOOTH ALL SIDES
SC	SOLID CORE, SILL COCK
SCHED	SCHEDULE
SCT	STRUCTURAL CLAY TILE
SD	STORM DRAIN, SPLITTER DAMPER, SMOKE DAMPER
SEC	SECTION
SF	SQUARE FEET
SGI	SMALL GROUP INSTRUCTION
SGT	STRUCTURAL GLAZED TILE
SH	SHELF, SHELVING, SMOKE HATCH
SHR	SHOWER, SHEARWALL
SHT	SHEET
SHTHG	SHEATHING
SIM	SIMILAR
SK	SINK
SL	SOUND LINED, SKYLIGHT
SLC	SILLCOCK
SLV	SLEEVE
SLVR	STORM LOUVER
SMH	SANITARY MANHOLE
SOG	SLAB ON GRADE
SP	STATIC PRESSURE, STANDPIPE
SPEC	SPECIFICATION (S)
SPKR	SPRINKLER
SPL	SPECIAL
SQ	SQUARE
SS	STAINLESS STEEL
SST	STRUCTURAL STEEL TUBING
ST	STORM, STORAGE
STA	STATION
STC	SHOWER TEMPERATURE CONTROLLER
STD	STANDARD
STG	SEATING
STL	STEEL
STN	STAIN (ED)
STOR	STORAGE
STRU	STRUCTURAL
SURF	SURFACE
SUSP	SUSPENDED
SV	SHEET VINYL
SVCI	SERVICE WEIGHT CAST IRON
SW	SWITCH, SOFTENED WATER
SYM	SYMMETRICAL
SYN	SYNTHETIC
SYS	SYSTEM
T	TREAD, TOP, TOILET ROOM, TERRAZZO
TB	TOP AND BOTTOM
TBD	TACKBOARD, TO BE DETERMINED
TG	TONGUE AND GROOVE
TC	TEMPERATURE CONTROL, TEMPERED CLEAR, TELECOMMUNICATIONS CONTRACTOR
TDV	TRIPLE DUTY VALVE
TEL	TELEPHONE
TEMP	TEMPERATURE
TG	TOP GRILLE
THK	THICKNESS
THR	THRESHOLD
TME	TO MATCH EXISTING
TMV	THERMOSTATIC MIXING VALVE
TC	TOP OF CURB
TOF	TOP OF FASCIA
TOIL	TOILET
TOL	TOLERANCE
TOM	TOP OF MASONRY
TOP	TOP OF PIPE, TOP OF PIER
TOS	TOP OF STEEL, TOP OF STAIR
TPART	TOILET PARTITION
TR	TOP REGISTER
TRN	TRANSOM
TS	TOP OF STAIR
TV	TELEVISION
TW	TEMPERED WATER, TOP OF WALL
TYP	TYPICAL
UC	UNDERCUT
UD	UNDERDRAIN
UE	UNDERGROUND ELECTRIC
UG	UNDERGROUND
UH	UNIT HEATER
UNF	UNFINISHED
UNIF	UNIFORM
UNO	UNLESS NOTED OTHERWISE
UR	URINAL
UT	UNDERGROUND TELEPHONE
UV	UNIT VENTILATOR
V	VENT, VOLT
VAR	VARIES, VARIABLE
VARN	VARNISH
VAT	VINYL ASBESTOS TILE
VAV	VARIABLE AIR VOLUME
VB	VACUUM BREAKER, VAPOR RETARDER BARRIER
VCT	VINYL COMPOSITE TILE
VD	VOLUME DAMPER
VERM	VERMICULITE
VERT	VERTICAL
VIF	VERIFY IN FIELD
VIN	VINYL
VIT	VITREOUS TILE
VNR	VENEER
VOL	VOLUME
VTR	VENT THROUGH ROOF
VWC	VINYL WALL COVERING
W	WEST, WIDTH, WIDE, WASTE, WATT
WC	WATER CLOSET, WALL COVERING
WD	WOOD
WDW	WINDOW
WDWC	WINDOW CONTRACTOR
WF	WASH FOUNTAIN
WG	WALL GRILLE
WH	WALL HUNG, WALL HYDRANT
WI	WROUGHT IRON
WM	WIREMOLD
WP	WATER PROOFING, WORKING POINT
WR	WATER REPELLENT, WIDE RIB, WALL REGISTER
WS	WATER STOP
WSCT	WAINSCOT
WT	WEIGHT
WWM	WELDED WIRE MESH
W/	WITH
W/O	WITHOUT
XHCI	EXTRA HEAVY CAST IRON
YD	YARD DRAIN, YARD

12 Dec. 01

Thomas Associates
Architects, Engineers,
Landscape Architects P.C.

Ithaca, Farmingdale, Albany, Buffalo, Jamestown, Rochester
Syracuse, Utica, White Plains, New York
Princeton, New Jersey

REGISTERED ARCHITECT STEVEN FRANK MOOLIN No. 021568 STATE OF NEW YORK

Set No.
Contracts 2002-13,14,15

August 19, 2002 5724

ZONING.
ZONE: R-5 (ASSISTED LIVING-NEW PERMITTED)
BULK REQUIREMENTS:

	R-5
MIN. LOT AREA	7,000 S.F
MAX FLOOR AREA RATIO	0.35%
MIN. LOT WIDTH	75'
MIN. FRONT YARD	30'
MIN. ONE SIDE YARD	8'
MIN. BOTH SIDE YARDS	20'
MIN. REAR YARD	30'
MAX. BLDG. HEIGHT	35'/2 1/2 STY.
SPECIFIED DISTANCE	50'

UTILITIES:

THE FOLLOWING COMPANIES WERE NOTIFIED BY THE NEW YORK UNDERGROUND SYSTEM (1-800-962-7962) AND REQUESTED TO MARK OUT UNDERGROUND FACILITIES AFFECTING AND SERVICING THIS SITE. THE UNDERGROUND UTILITY INFORMATION SHOWN HEREON IS BASED UPON THE UTILITY COMPANIES RESPONSE TO THIS REQUEST.
SERIAL NUMBER(S): #20228897. 1997 MARKOUT REQUEST.

UTILITY COMPANY	PHONE NUMBER
CON ED	(718) 802-6000
NEW YORK AMERICAN WATER	(914) 967-7144
BELL ATLANTIC	(914) 345-3791
AT&T	(212) 387-5400
WESTCHESTER JOINT WATER	(914) 285-4422
TCI CABLE OF WESTCHESTER	(914) 777-3900

NOTES:

1. PROPERTY KNOWN AS LOT 7, BLOCK 5, SECTION 146.19 AS IDENTIFIED ON THE TAX MAPS OF THE CITY OF RYE, WESTCHESTER COUNTY, STATE OF NEW YORK.
2. DEED AREA = 294,204 S.F. OR 6.754 AC.
3. LOCATION OF ALL UNDERGROUND UTILITIES ARE APPROXIMATE. ALL LOCATIONS AND SIZES ARE BASED ON UTILITY MARK-OUTS, ABOVE GROUND STRUCTURES THAT WERE VISIBLE & ACCESSIBLE IN THE FIELD, AND THE MAPS AS LISTED IN THE REFERENCES AVAILABLE AT THE TIME OF THE SURVEY. BEFORE ANY EXCAVATION IS TO BEGIN, ALL UNDERGROUND UTILITIES SHOULD BE VERIFIED AS TO THEIR LOCATION, SIZE, AND TYPE BY THE PROPER UTILITY COMPANIES
4. THIS PLAN IS BASED ON INFORMATION PROVIDED BY A SURVEY PREPARED IN THE FIELD BY CONTROL POINT ASSOCIATES, INC. AND OTHER REFERENCE MATERIAL AS LISTED HEREON.
5. THIS SURVEY WAS PREPARED WITH REFERENCE TO A TITLE REPORT PREPARED BY FIRST AMERICAN TITLE INSURANCE COMPANY OF NEW YORK, TITLE NUMBER 231-W-13659, WITH AN AMENDED DATE OF JUNE 25, 2001. PER OUR REVIEW OF SCHEDULE B, THE FOLLOWING SURVEY RELATED ITEMS HAVE BEEN ADDRESSED.

(16) TERMS AND CONDITIONS CONTAINED IN EASEMENT AGREEMENT RECORDED IN LIBER 9325, PAGE 309, PERTAINS TO A 12 FOOT WIDE PERMANENT AND PERPETUAL EASEMENT AND "DRIVEWAY", "EASEMENT AREA" FOR INGRESS AND EGRESS ONLY BY VEHICLE OR FOOT FROM RYE BEACH AVENUE – AS SHOWN.

(17) EASEMENT RECORDED IN LIBER 1849, PAGE 309 PROVIDES FOR THE RIGHT TO CONSTRUCT AND MAINTAIN A SEWER THROUGH SAID PROPERTY – SEWER EASEMENT SHOWN.

(18) RIGHTS AND EASEMENTS CONTAINED IN LIBER 2469, PAGE 305 PERTAINS ALSO TO THE RIGHT TO MAINTAIN A SEWER LINE THROUGH PROPERTY – EASEMENT SHOWN

ALSO GRANTS THE RIGHTS TO CLOSE A PORTION OF A PRIVATE ROAD EXTENDING FROM MILTON ROAD TO RYE BEACH ROAD, PORTION OF PRIVATE ROAD TO BE CLOSED LOCATED ALONG SOUTHWESTERLY COURSES – AS SHOWN.

(19) REGRADING AND DRAINAGE IMPROVEMENT AGREEMENT RECORDED IN LIBER 8086, PAGE 89, PERTAINS TO THE CONSTRUCTION AND MAINTENANCE OF DRAINAGE PIPES AND 20 FOOT WIDE DRAINAGE EASEMENT – AS SHOWN.

6. ELEVATIONS ARE BASED UPON REF. NO. 8 REPORTED TO BE USC&GS BENCHMARK #12, ELEV.=11.2
7. PROPERTY IS PREDOMINATELY LOCATED IN FLOOD HAZARD ZONE A9 (AREAS OF 100-YEAR FLOOD; BASE FLOOD ELEVATIONS AND FLOOD HAZARD FACTORS DETERMINED) AND PARTIALLY LOCATED IN ZONE B (AREAS BETWEEN LIMITS OF THE 100-YEAR FLOOD AND 500-YEAR FLOOD; OR CERTAIN AREAS SUBJECT TO 100-YEAR FLOODING WITH AVERAGE DEPTHS LESS THAN ONE (1) FOOT OR WHERE THE CONTRIBUTING DRAINAGE AREA IS LESS THAN ONE SQUARE MILE; OR AREAS PROTECTED BY LEVEES FROM THE BASE FLOOD) BASE FLOOD ELEVATION 15 AS PER REF. MAP #2.
8. TOPOGRAPHY MAY DEVIATE IN AREAS DUE TO THE INACCESSIBILITY TO OBTAIN NATURAL GROUND ELEVATIONS THROUGH HEAVY MULCH & WOOD CHIP BUILD UP.
9. DELINEATION LINE IS SHOWN BASED UPON A PROIR MARKOUT AND MUST BE FEILD VERIFIED BY A CURRENT DELINEATION.

REFERENCES:

1. THE OFFICIAL TAX MAPS FOR THE CITY OF RYE, WESTCHESTER COUNTY, NEW YORK, SECTION 146.19.
2. MAP ENTITLED "NATIONAL FLOOD INSURANCE PROGRAM, FIRM, FLOOD INSURANCE RATE MAP, CITY OF RYE, NEW YORK, WESTCHESTER COUNTY, PANEL 2 OF 3, COMMUNITY PANEL NO. 360391 0002 E," PREPARED BY THE FEDERAL EMERGENCY MANAGEMENT AGENCY, MAP REVISED NOVEMBER 1, 1984.
3. MAP ENTITLED "MAP SHOWING R.O.W. FOR SEWER LINE DESIRED BY THE VILLAGE OF RYE, THROUGH TRACT IV, BLOCK 122, SITUATE IN THE VILLAGE OF RYE, COUNTY OF WESTCHESTER, STATE OF NEW YORK," DATED JUNE 19, 1908.
4. "SURVEY OF NO. 279 RYE BEACH ROAD, ALSO SHOWN AS LOT 9, BLOCK 5, SECTION 146.19 ON THE OFFICIAL TAX MAP OF THE CITY OF RYE, WESTCHESTER COUNTY, NEW YORK," DATED APRIL 6, 1988 AND PREPARED BY ARISTOLE BOURNAZOS, P.C.
5. MAP ENTITLED "WESTCHESTER COUNTY PARK COMMISSION, MAP SHOWING LOCATION OF EASEMENTS THROUGH LANDS WEST OF FOURTH AVENUE, SHEET NO. 21, CROSS COUNTY PARKWAY, WESTCHESTER COUNTY, NEW YORK," DATED APRIL 3, 1929 AND FILED IN THE REGISTER OF WESTCHESTER COUNTY ON APRIL 26, 1929 AS MAP NUMBER 3418.
6. MAP ENTITLED "GRADING, SITE PLAN, MILTON ROAD REALTY COMPANY, 421, MILTON ROAD, CITY OF RYE, NEW YORK, 10580," PREPARED BY KRAVCHENKO AND ASSOCIATES, DATED DECEMBER 8, 1980, SHEETS 1 AND 2 OF 2.
7. MAP ENTITLED "MAP OF PROPERTY BELONGING TO BERNARD TRUBIN, RYE, NEW YORK," DATED NOVEMBER 22, 1928, PREPARED BY JOHN A. EHLER.
8. MAP ENTITLED "WESTCHESTER COUNTY, PLAYLAND PARKWAY, CITY OF RYE, ROADWAY RE-SURFACING AND DRAINAGE IMPROVEMENTS FROM NORTH STREET BRIDGE OVERPASS TO FOURTH AVENUE, A DISTANCE OF 0.19 MILES, CONTRACT NUMBER 96-567," PREPARED BY WESTCHESTER COUNTY, NEW YORK, DEPARTMENT OF PUBLIC WORKS, DIVISION OF ENGINEERING, DATED APRIL 23, 1997, SHEETS, 1, 9 & 10 OF 14.
9. MAP ENTITLED "MAP OF RYE GATE, THE PROPERTY OF RYE GATE COMPANY INCORPORATED, SITUATE NEAR OAKLAND BEACH, RYE, WESTCHESTER COUNTY, NEW YORK," PREPARED BY J. A. KIRBY AND COMPANY, DATED SEPTEMBER 1912, FILED IN THE WESTCHESTER COUNTY REGISTERS OFFICE AS MAP NUMBER 1998.
10. MAP ENTITLED "WESTCHESTER COUNTY PARK COMMISSION, MAP OF LANDS TO BE ACQUIRED FOR THE CROSS COUNTY PARKWAY, WESTCHESTER COUNTY, NEW YORK, AS AMENDED," PREPARED BY F. S. ODELL ENGINEERING CORP., DATED AND FILED MARCH 9, 1926 IN THE OFFICE OF THE REGISTER OF WESTCHESTER COUNTY AS MAP NUMBER 2791 AND AMENDED LAST ON AUGUST 1927.
11. MAP ENTITLED "MAP OF RIDGELAND TERRACE IN THE CITY OF RYE, NEW YORK," PREPARED BY J. A. KIRBY & COMPANY, DATED DECEMBER 16, 1948 AND FILED IN THE WESTCHESTER COUNTY REGISTERS OFFICE ON JANUARY 1, 1949 AS MAP NUMBER 6726.
12. MAP ENTITLED "MAP OF PROPERTY SITUATED IN THE CITY OF RYE, WESTCHESTER COUNTY, NEW YORK".
13. MAP ENTITLED "SURVEY OF PROPERTY PREPARED FOR DANTE A. RICH, SITUATED IN THE CITY OF RYE, WESTCHESTER COUNTY, NEW YORK," DATED DECEMBER 27, 1950, AND RECORDED IN LIBER 9325, PAGE 315.
14. "MAP OF PROPERTY PREPARED FOR FRANK L. RICH, SITUATED IN THE CITY OF RYE, WESTCHESTER COUNTY, NEW YORK," RECORDED IN LIBER 9325, PAGE 313.

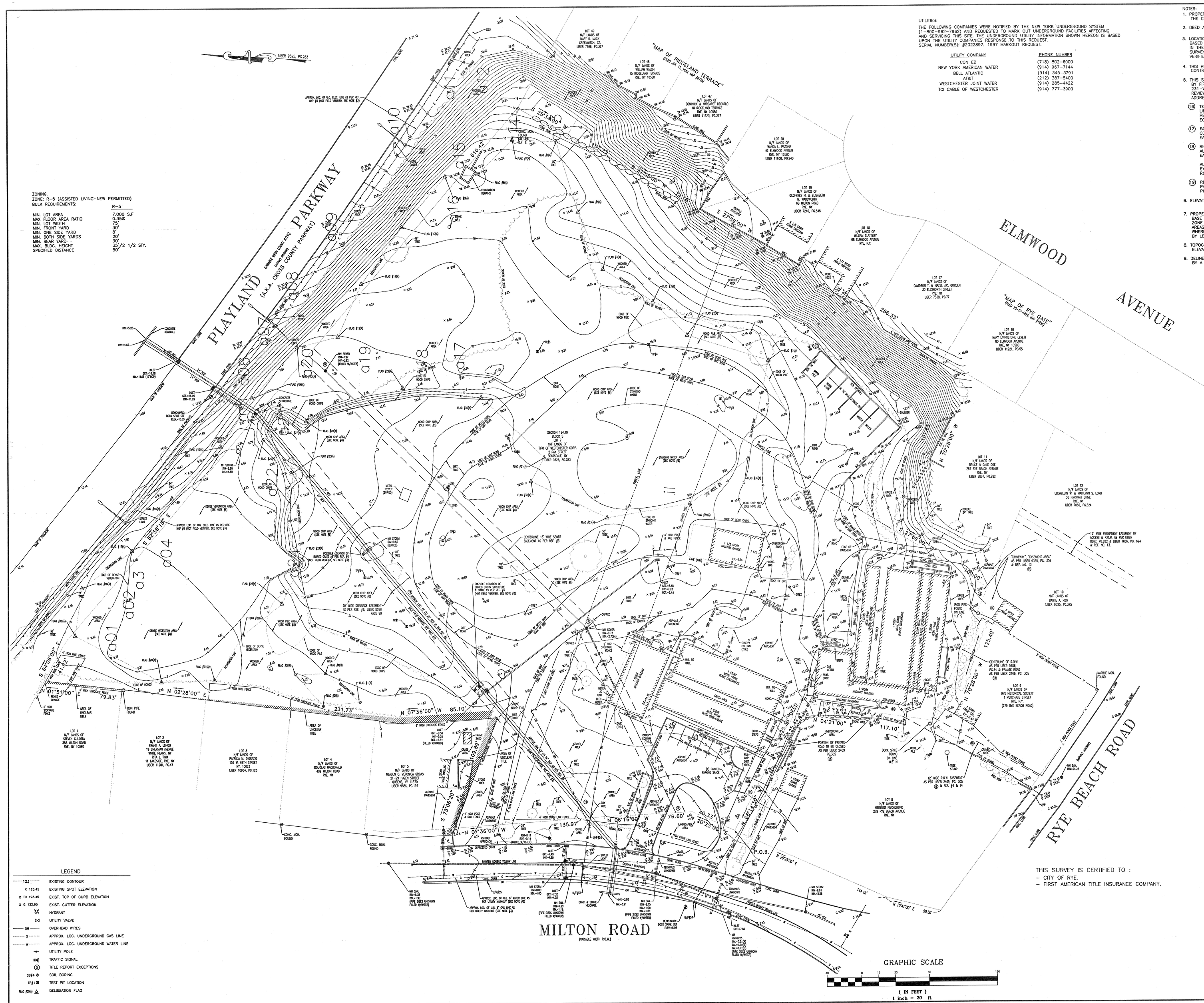

LEGEND

123	EXISTING CONTOUR
x 123.45	EXISTING SPOT ELEVATION
x TC 123.45	EXIST. TOP OF CURB ELEVATION
x G 122.95	EXIST. GUTTER ELEVATION
	HYDRANT
	UTILITY VALVE
OH	OVERHEAD WIRES
G	APPROX. LOC. UNDERGROUND GAS LINE
W	APPROX. LOC. UNDERGROUND WATER LINE
	UTILITY POLE
	TRAFFIC SIGNAL
5	TITLE REPORT EXCEPTIONS
SB#4	SOIL BORING
TP#1	TEST PIT LOCATION
FLAG #100	DELINEATION FLAG

THIS SURVEY IS CERTIFIED TO :
- CITY OF RYE.
- FIRST AMERICAN TITLE INSURANCE COMPANY.

FIELD DATE: 7-17-01 1-6-97	BOUNDARY & TOPOGRAPHIC SURVEY CITY OF RYE 421 MILTON ROAD LOT 7, BLOCK 5, SECTION 146.19 CITY OF RYE, WESTCHESTER COUNTY STATE OF NEW YORK			
F/B NO. 98-03				
F/B PG. 4-10				
DRAWN: T.D.M.				
CHECKED: P.J.				
REV. NO. 0	DATE 7-19-01	SCALE 1"=30'	FILE NO. C97434R	DWG. NO. OF

OBSCURED
OBSCURED
OBSCURED
OBSCURED
OBSCURED
OBSCURED
OBSCURED
OBSCURED
X29.3
X30.7
X18.5
X18.6
X17.5
X18.5
X21.1
X22.9
X23.3
X23.6
X23.5
X30.6
X17.7
X27.3
X17.6
X15.2
X14.9
X13.8
X15.6
X15.8
X15.4
X14.7
X19.5
X13.3
X13.4
X13.5
X14.8
X21.7
X16.8
X16.9
X15.5
X15.2
X15.3
X18.8
X15.5
X15.8
X14.2
X14.2
X21.9
X19.6
X20.3
X19.1
X15.1
X15.8
X15.7
X17.1
X14.3
X14.6
X16.6
22.4

General Notes

1. ALL WORK ON THIS DRAWING TO BE PART OF THE SITE WORK CONTRACT UNLESS OTHERWISE NOTED.
2. ALL BOUNDARY AND TOPOGRAPHIC INFORMATION INDICATED ON SITE PLAN OBTAINED FROM SURVEY TITLED "BOUNDARY AND TOPOGRAPHIC SURVEY, CITY OF RYE" BY CONTRO; POINT ASSOCIATES, INC., LAND SURVEYOR, DATED 07/19/01. SURVEY DRAWING IS PROVIDED FOR INFORMATION ONLY. IT IS THE BASE INFORMATION USED TO PREPARE THE WORK INDICATED ON "L" SERIES DRAWINGS. THE DATA INDICATED REGARDING EXISTING SURFACE CONDITIONS IS NOT INTENDED AS REPRESENTATIONS OR WARRANTIES OF THEIR ACCURACY BY INCLUSION OF THIS SURVEY IN THE SET OF DOCUMENTS. THOMAS ASSOCIATES, P.C., DOES NOT ASSUME RESPONSIBILITY FOR ACCURACY OF THE SURVEY NOR FOR INTERPRETATIONS OR CONCLUSIONS DRAWN THEREFROM BY THE CONTRACTOR. IT IS ALSO EXPRESSLY UNDERSTOOD THAT THE OWNER WILL NOT BE RESPONSIBLE FOR INTERPRETATIONS OR CONCLUSIONS DRAWING THEREFROM BY THE CONTRACTOR. ERROR OF TOPOGRAPHIC INFORMATION WAS REQUIRED NOT TO EXCEED ONE HALF OF THE CONTOUR INTERVAL.
3. CONTRACTOR SHALL VERIFY ALL EXISTING CONDITIONS AND DIMENSIONS IN FIELD PRIOR TO COMMENCEMENT OF WORK AND NOTIFY ARCHITECT OF ANY DISCREPANCIES IMMEDIATELY.
4. NO ATTEMPT HAS BEEN MADE TO SHOW ALL UNDERGROUND UTILITIES ON THIS DRAWING. U.F.P.O. AND LOCAL UTILITY COMPANIES SHOULD BE CONTACTED TO VERIFY THE LOCATION OF ALL UTILITIES PRIOR TO TRENCHING OR EXCAVATION OPERATIONS.
5. CONTRACT LIMIT LINE (CLL) SHALL BE TEN FEET OUTSIDE OF LIMITS OF WORK SHOWN ON THESE DRAWINGS UNLESS NOTED OTHERWISE.
6. CONTRACTOR SHALL PROVIDE CONSTRUCTION/PROTECTIVE FENCING OR OTHER MEANS NECESSARY TO PROTECT WORK AND TO ENSURE SAFETY OF PEDESTRIAN AND VEHICULAR TRAFFIC DURING CONSTRUCTION.
7. PROVIDE 4' MINIMUM HEIGHT PROTECTIVE FENCING AT DRIPLINE OF ALL EXISTING TREES AND SHRUB MASSES SCHEDULED TO REMAIN DURING CONSTRUCTION.
8. INSTALL SOIL AND EROSION CONTROL FACILITIES PRIOR TO START OF EARTHWORK OPERATIONS PER LOCAL GOVERNING SOIL AND WATER CONSERVATION AGENCY RECOMMENDATIONS AND STANDARDS. SEE DRAWING L2 FOR ADDITIONAL INFORMATION.
9. COMPLETE DRAWING SET WAS CREATED USING AUTOCAD RELEASE 2000. ALL ELECTRONIC DATA INCLUDING POINTS FILES USED IN THE PREPARATION OF THESE DRAWINGS WILL BE MADE AVAILABLE UPON WRITTEN REQUEST TO THE SUCCESSFUL CONTRACTOR TO ASSIST IN PRELIMINARY AND FINAL LAYOUT IN FIELD.
10. FOR INFORMATION REGARDING SUBSURFACE CONDITIONS AT TEST BORING LOCATIONS, SEE PROJECT MANUAL SECTION 02300 -EARTHWORK.
11. TOPSOIL SHALL BE STRIPPED FROM "CUT AREAS" TO FULL DEPTH AND STOCKPILED AT LOCATIONS AGREED UPON AT THE PRECONSTRUCTION MEETING, MECHANICALLY SCREENED, THEN REDISTRIBUTED DURING FINAL GRADING OPERATIONS. NO TOPSOIL SHALL BE REMOVED FROM SITE.
12. ALL TOPSOIL, IMPORTED AND FROM ON SITE, SHALL BE MECHANICALLY SCREENED BEFORE USE. REFER TO PROJECT MANUAL SECTION 02300 - EARTHWORK FOR ADDITIONAL INFORMATION.
13. SPREAD ALL TOPSOIL FROM STRIPPING OPERATION TO A MINIMUM DEPTH OF 6" OVER ALL AREAS OF SITE WHERE EARTH HAS BEEN EXPOSED BY EXCAVATING, CUTTING, FILLING OR GRADING EXCEPT WHERE ASPHALT OR CONCRETE PAVING IS REQUIRED. CONTRACTOR SHALL IMPORT ADDITIONAL TOPSOIL AS REQUIRED TO MAINTAIN MINIMUM 6" DEPTH.
14. AFTER FINE GRADING IS COMPLETED, INFORM THE OWNER AND A/E SO THAT AN INSPECTION OF THE FINE GRADING CAN TAKE PLACE BEFORE SEEDING IS BEGUN.
15. EXCESS FILL MATERIAL TO BE REMOVED FROM THE SITE AND LEGALLY DISPOSED OF (AS PER PROJECT MANUAL).
16. ALL AREAS NOT SPECIFICALLY INDICATED TO RECEIVE IMPROVED SURFACING WITHIN THE CONTRACT LIMIT LINE (I.E. BUILDING, ASPHALT, AND CONCRETE PAVING, CURBING, ETC.) SHALL BE FINE GRADED, SEEDED, FERTILIZED AND MULCHED AS PER THE PROJECT MANUAL. VARIATIONS IN FINE GRADING SHALL NOT EXCEED TOLERANCES INDICATED IN SECTION 02300 - EARTHWORK.
17. THE CONTRACTOR SHALL FIELD VERIFY EXISTING TOPOGRAPHY PRIOR TO COMMENCEMENT OF EARTHWORK OPERATION. ANY ELEVATIONAL DISCREPANCIES WHICH WILL AFFECT THE WORK REQUIRED AS PART OF THE CONTRACT DOCUMENTS SHALL BE IMMEDIATELY REPORTED TO THE ARCHITECT. COMMENCEMENT OF WORK WITHOUT THIS WRITTEN NOTIFICATION SHALL CONSTITUTE CONTRACTOR ACCEPTANCE OF THE EXISTING TOPOGRAPHY INDICATED ON THE DRAWINGS AS ACCURATE. NO ADJUSTMENTS TO THE CONTRACT WILL BE MADE FOR THE DISCREPANCIES BROUGHT TO THE OWNER'S ATTENTION AFTER WORK HAS BEGUN.

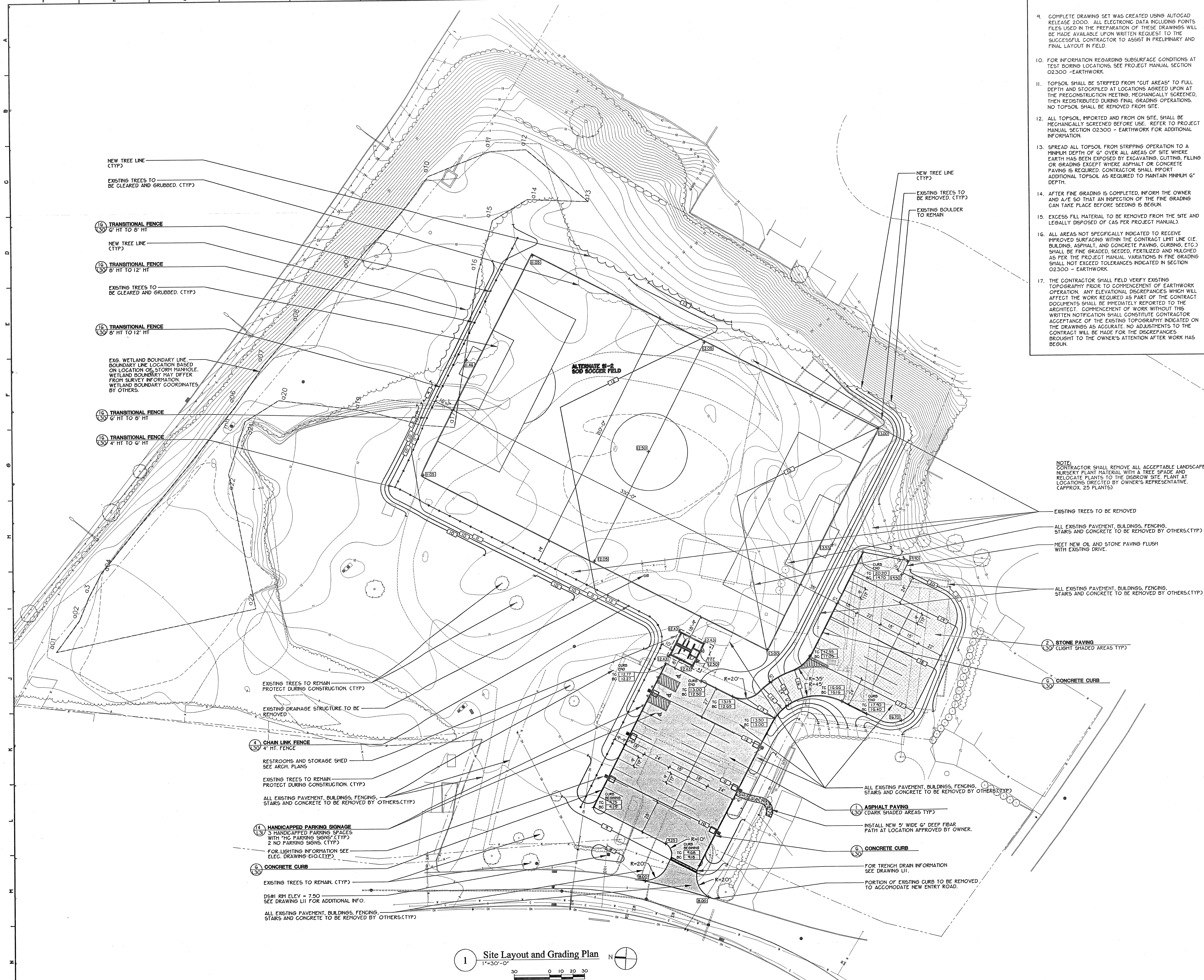

1 Site Layout and Grading Plan
1"=30'-0"

0 10 20 30

Rev. No.:	Date:	Description:

Thomas Associates
Architects, Engineers, Landscape Architects P.C.
Ithaca, Farmingdale, Albany, Buffalo, Jamestown, Rochester, Syracuse, Utica, White Plains, New York
Princeton, New Jersey

REGISTERED ARCHITECT STEVEN FRANK MOOLIN No. 021568 STATE OF NEW YORK

City of Rye Recreation Department
Rye, New York

Rye Nursery and Disbrow Park

Rye Nursery
Site Layout and Grading Plan

Drawn by:	Date:	Drawing No.:
jtm	August 19, 2002	L10
T+ Project No.: 5724		

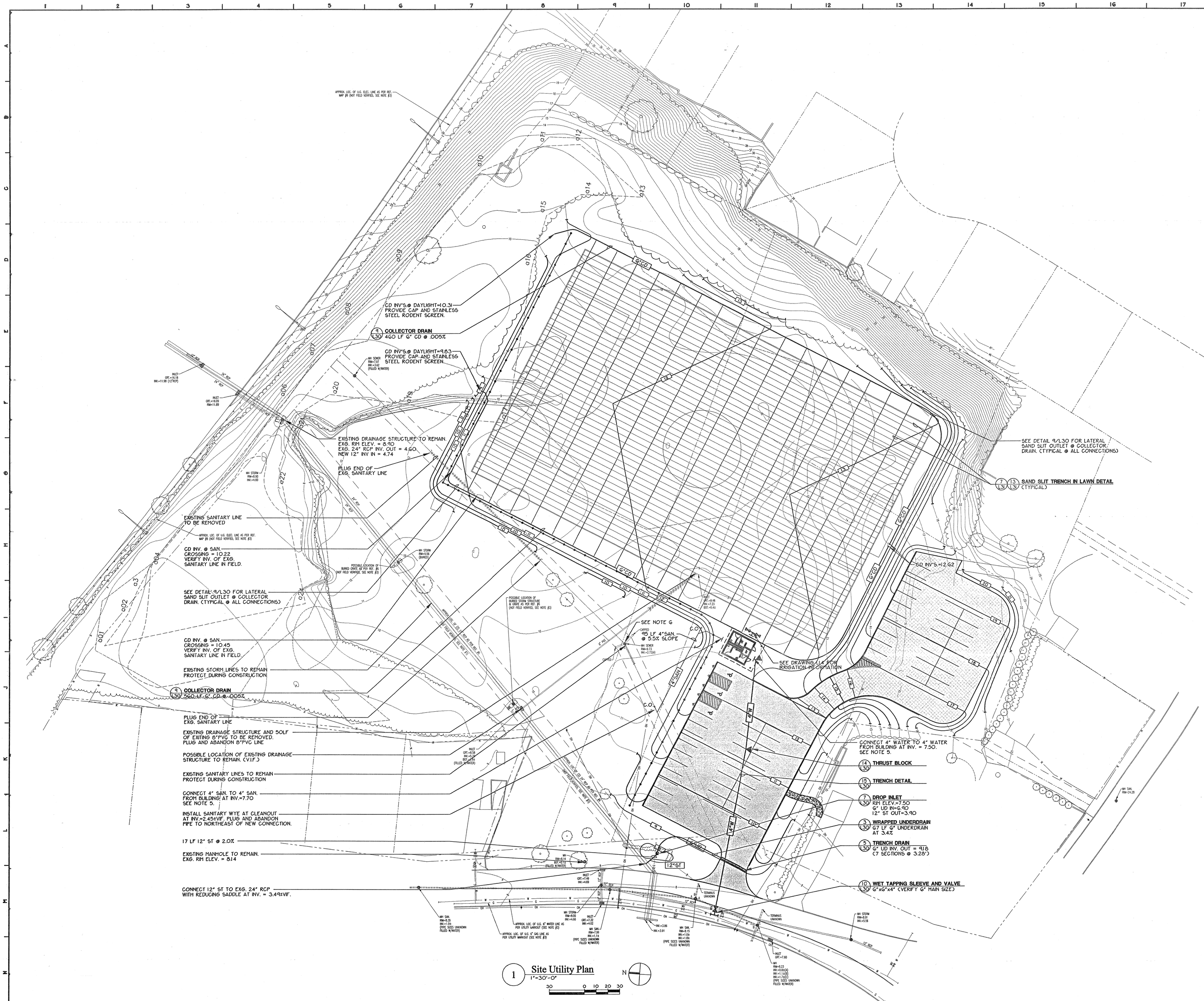

1 Site Utility Plan
1"=30'-0"

Drawing Notes

1. ALL WORK THIS DRAWING TO BE PART OF THE SITE WORK CONTRACT UNLESS OTHERWISE NOTED.
2. REFER TO DRAWING L10 FOR ADDITIONAL GENERAL NOTES.
3. ALL STORM PIPING TO BE HDPE UNLESS OTHERWISE NOTED.
4. ALL WATER PIPING TO BE DUCTILE IRON CLASS 52 UNLESS OTHERWISE NOTED.
5. FOR CONTINUATION SEE PLUMBING DRAWING P10.
6. CONTRACTOR TO CLEAN OUT AND TELEVISE EXISTING SANITARY LINE FROM MANHOLE SOUTHWEST TO EXISTING MANHOLE IN ROADWAY BEFORE PROCEEDING WITH NEW CONNECTION. NOTIFY ARCHITECT IMMEDIATELY OF CONDITION OF LINE.

Rev. No.:	Date:	Description:

REGISTERED ARCHITECT STEVEN FRANK MOULIN No. 021568 STATE OF NEW YORK

Thomas Associates
Architects, Engineers, Landscape Architects P.C.
Ithaca, Farmingdale, Albany, Buffalo, Jamestown, Rochester, Syracuse, Utica, White Plains, New York
Princeton, New Jersey

City of Rye Recreation Department
Rye, New York

Rye Nursery and Disbrow Park

Rye Nursery
Site Utility Plan

Drawn by:	Date:	Drawing No.:
jtm	August 19, 2002	L11
T+ Project No.: 5724		

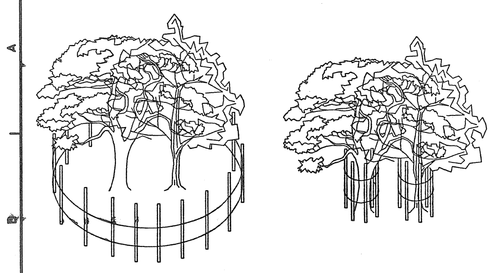

CORRECT
FENCING FOR TREE PROTECTION
INSTALL FENCING AT EDGE OF TREE CANOPY DRIP LINE.

INCORRECT
FENCING FOR TREE PROTECTION

2 Temporary Tree Protection

N.T.S.

2200-101

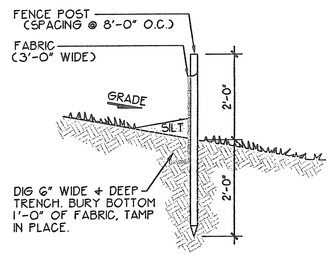

3 Silt Fence Detail

1/2" = 1'-0"

2200-204

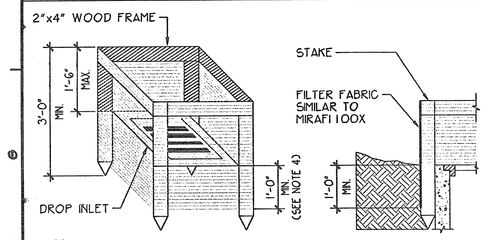

NOTES:
1) CUT FABRIC FROM A CONTINUOUS ROLL TO ELIMINATE JOINTS. IF JOINTS ARE NEEDED, THEY WILL BE OVERLAPPED TO THE NEXT STAKE.
2) STAKE MATERIALS WILL BE STANDARD 2"x4" WOOD OR EQUIVALENT. METAL WITH A MINIMUM LENGTH OF 3 FEET.
3) SPACE STAKES EVENLY AROUND INLET 3 FEET APART AND DRIVE A MIN. OF 18 INCHES DEEP. SPANS GREATER THAN 3 FEET MAY BE BRIDGED WITH THE USE OF WIRE MESH BEHIND THE FILTER FABRIC FOR SUPPORT.
4) FABRIC SHALL BE EMBEDDED 1 FOOT MINIMUM BELOW GROUND AND BACKFILLED. IT SHALL BE SECURELY FASTENED TO THE STAKES + FRAME.
5) A 2"x4" WOOD FRAME SHALL BE COMPLETED AROUND THE CREST OF THE FABRIC FOR OVERFLOW STABILITY.

4 Drop Inlet Protector

1/2"=1'-0"

2200-208

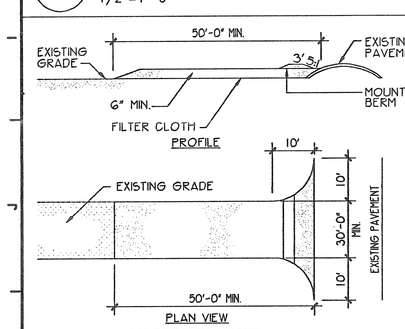

CONSTRUCTION SPECIFICATIONS

1. STONE SIZE - USE 2 1/2" STONE OR RECLAIMED OR RECYCLED CONCRETE EQUIVALENT.
2. LENGTH - AS REQUIRED BUT NOT LESS THAN 50' FEET.
3. THICKNESS - NOT LESS THAN SIX (6) INCHES.
4. WIDTH - TWENTY FOUR (24) FEET MINIMUM BUT NOT LESS THAN THE FULL WIDTH AT POINTS WHERE INGRESS OR EGRESS OCCURS.
5. FILTER CLOTH - WILL BE PLACED OVER ENTIRE AREA PRIOR TO PLACEMENT OF STONE.
6. SURFACE WATER - ALL SURFACE WATER FLOWING OR DIVERTED TOWARD CONSTRUCTION ENTRANCES SHALL BE PIPED ACROSS ENTRANCE. IF PIPING IS IMPRACTICAL, A MOUNTABLE BERM WITH A 5 : 1 SLOPE SHALL BE PERMITTED.
7. MAINTENANCE - THE ENTRANCE SHALL BE MAINTAINED IN CONDITION WHICH WILL PREVENT TRACKING OR FLOWING OF SEDIMENT ONTO PUBLIC RIGHTS-OF -WAY. THIS MAY REQUIRE PERIODIC TOP DRESSING WITH ADDITIONAL STONE AS CONDITIONS DEMAND AND REPAIR AND/OR CLEANOUT OF ANY MEASURES USED TO TRAP SEDIMENT. ALL SEDIMENT SPILLED, DROPPED, WASHED OR TRACKED ONTO PUBLIC RIGHTS-OF-WAY MUST BE REMOVED IMMEDIATELY.
8. WASHING - WHEELS SHALL BE CLEANED TO REMOVE SEDIMENT PRIOR TO EXIT ONTO PUBLIC RIGHTS-OF-WAY. WHEN WASHING IS REQUIRED, IT SHALL BE DONE ON AN AREA STABILIZED WITH STONE AND WHICH DRAINS INTO AN APPROVED SEDIMENT TRAPPING DEVICE.

PERIODIC INSPECTION AND NEEDED MAINTENANCE SHALL BE PROVIDED AFTER EACH RAIN.

5 Stabilized Construction Entrance Detail

N.T.S.

2200-301

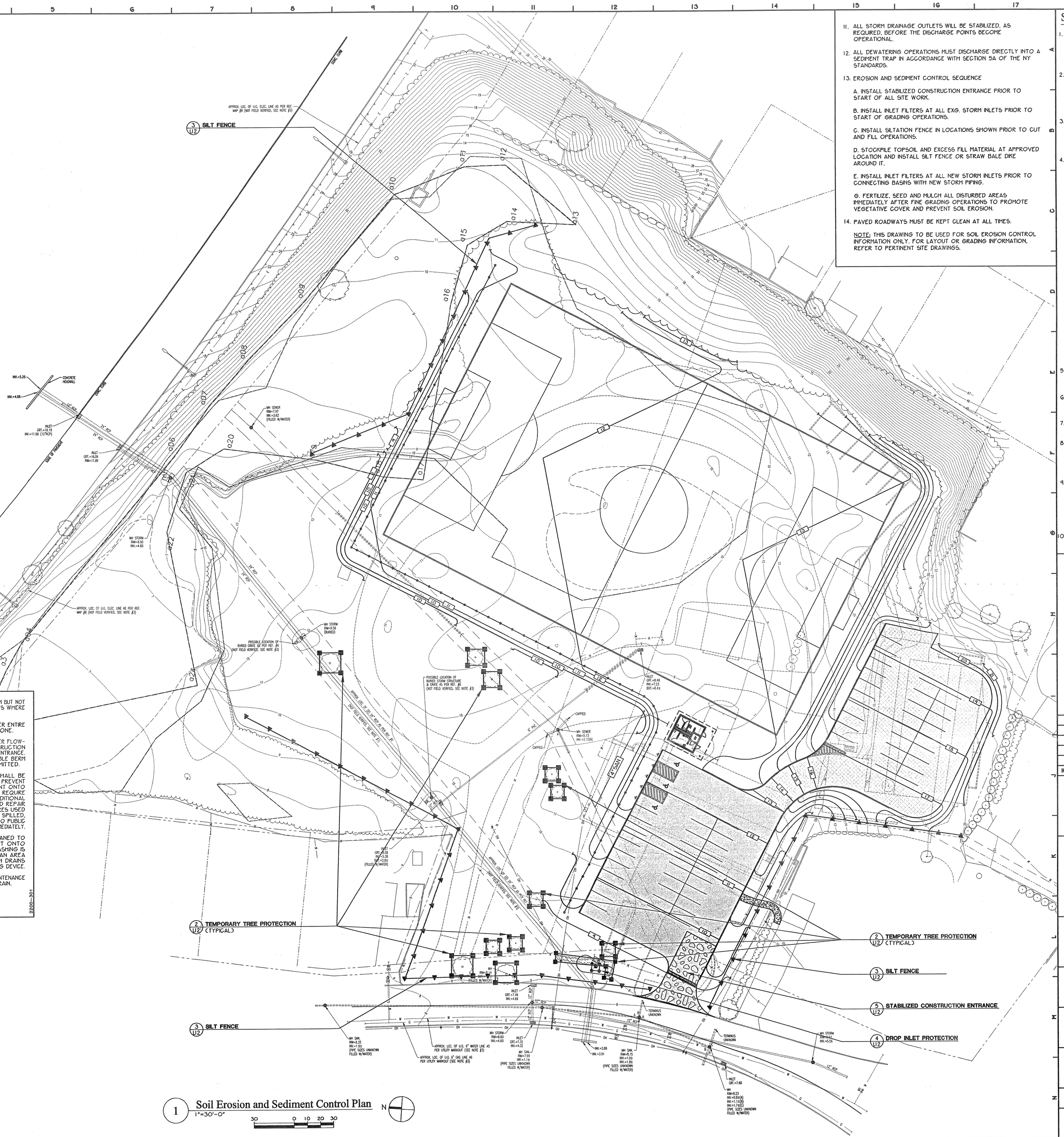

1 Soil Erosion and Sediment Control Plan

1"=30'-0"

30 0 10 20 30

N

11. ALL STORM DRAINAGE OUTLETS WILL BE STABILIZED, AS REQUIRED, BEFORE THE DISCHARGE POINTS BECOME OPERATIONAL.
12. ALL DEWATERING OPERATIONS MUST DISCHARGE DIRECTLY INTO A SEDIMENT TRAP IN ACCORDANCE WITH SECTION 5A OF THE NY STANDARDS.
13. EROSION AND SEDIMENT CONTROL SEQUENCE

    A. INSTALL STABILIZED CONSTRUCTION ENTRANCE PRIOR TO START OF ALL SITE WORK.

    B. INSTALL INLET FILTERS AT ALL EXG. STORM INLETS PRIOR TO START OF GRADING OPERATIONS.

    C. INSTALL SILTATION FENCE IN LOCATIONS SHOWN PRIOR TO CUT AND FILL OPERATIONS.

    D. STOCKPILE TOPSOIL AND EXCESS FILL MATERIAL AT APPROVED LOCATION AND INSTALL SILT FENCE OR STRAW BALE DIKE AROUND IT.

    E. INSTALL INLET FILTERS AT ALL NEW STORM INLETS PRIOR TO CONNECTING BASINS WITH NEW STORM PIPING.

    G. FERTILIZE, SEED AND MULCH ALL DISTURBED AREAS IMMEDIATELY AFTER FINE GRADING OPERATIONS TO PROMOTE VEGETATIVE COVER AND PREVENT SOIL EROSION.
14. PAVED ROADWAYS MUST BE KEPT CLEAN AT ALL TIMES.

NOTE: THIS DRAWING TO BE USED FOR SOIL EROSION CONTROL INFORMATION ONLY. FOR LAYOUT OR GRADING INFORMATION, REFER TO PERTINENT SITE DRAWINGS.

Soil Erosion and Sediment Control Notes

1. ALL SOIL EROSION AND SEDIMENT CONTROL PRACTICES WILL BE INSTALLED IN ACCORDANCE WITH THE STANDARDS SPECIFIED IN THE NEW YORK GUIDELINES FOR URBAN EROSION AND SEDIMENT CONTROL, AND WILL BE INSTALLED IN PROPER SEQUENCE AND MAINTAINED UNTIL PERMANENT PROTECTION IS ESTABLISHED.
2. ANY DISTURBED AREA THAT WILL BE LEFT EXPOSED FOR MORE THAN FIFTEEN (15) DAYS AND NOT SUBJECT TO CONSTRUCTION TRAFFIC SHALL IMMEDIATELY RECEIVE A TEMPORARY SEEDING. IF THE SEASON PROHIBITS TEMP. SEEDING, THE DISTURBED AREA WILL BE MULCHED WITH SALT HAY OR EQUIVALENT AND BOUND IN ACCORDANCE WITH THE NY STANDARDS.
3. IMMEDIATELY FOLLOWING INITIAL DISTURBANCE OR ROUGH GRADING, ALL CRITICAL AREAS SUBJECT TO EROSION WILL RECEIVE A TEMPORARY SEEDING IN COMBINATION WITH STRAW MULCH OR A SUITABLE EQUIVALENT ACCORDING TO THE NY STANDARDS.
4. STABILIZATION SPECIFICATIONS:

   A. SOIL AMENDMENTS:

   LME - PROVIDE GROUND LIMESTONE TO PH OF 6.0.

   FERTILIZER - 14 LBS/1,000 S.F., 5-10-10 OR EQUIVALENT WORKED INTO SOIL A MINIMUM OF 4".

   B. TEMPORARY SEEDING AND MULCHING:

   SEED - ANNUAL RYEGRASS 30 LBS/ACRE; PLANT BETWEEN MARCH 1 AND MAY 15 OR BETWEEN AUGUST 15 AND OCTOBER 1. USE WINTER RYE IF SEEDING IN OCT./NOV.

   MULCH - SALT HAY OR SMALL GRAIN STRAW AT A RATE OF 90 LBS/1,000 S.F., TO BE APPLIED ACCORDING TO THE NY STANDARDS. MULCH SHALL BE SECURED BY WOOD FIBER MULCH (HYDROMULCH) AT 11-17 LBS/1,000 S.F. WOOD FIBER MULCH MUST BE APPLIED THROUGH A HYDROSEEDER IMMEDIATELY AFTER MULCHING.

   C. PERMANENT SEEDING AND MULCHING:

   SEED - REFER TO PROJECT MANUAL SPECIFICATIONS FOR SEED TYPE, RATE OF SEEDING AND SEASON OF SEEDING. RATE AND SEED TYPE ARE TO MEET THE MINIMUM REQUIREMENTS OF THE NY STANDARDS. MULCH - REFER TO PROJECT MANUAL SPECIFICATIONS FOR MULCH TYPE, RATE OF APPLICATION, ETC. RATE AND MULCH TYPE ARE TO MEET THE MINIMUM REQUIREMENTS OF THE NY STANDARDS.
5. TEMPORARY BERMS ARE TO BE INSTALLED ON ALL CLEARED ROADWAYS AND EASEMENT AREAS IN ACCORDANCE WITH SECTION 5A OF THE NY STANDARDS.
6. THE SITE SHALL AT ALL TIMES BE GRADED AND MAINTAINED SUCH THAT ALL STORMWATER RUN-OFF IS DIVERTED TO SOIL EROSION AND SEDIMENT CONTROL FACILITIES.
7. ALL SEDIMENTATION STRUCTURES WILL BE INSPECTED AND MAINTAINED ON A REGULAR BASIS.
8. STOCKPILES ARE NOT TO BE LOCATED WITHIN 50' OF A FLOODPLAIN, SLOPE, ROADWAY, OR DRAINAGE FACILITY. THE BASE OF ALL STOCKPILES SHOULD BE PROTECTED BY A SILT DAM OR STRAW BALE DIKE IN ACCORDANCE WITH NY STANDARDS.
9. A CRUSHED STONE, VEHICLE WHEEL-CLEANING BLANKET WILL BE INSTALLED WHEREVER A CONSTRUCTION ACCESS ROAD INTERSECTS ANY PAVED ROADWAY. SAID BLANKET WILL BE COMPOSED OF 2 1/2" CRUSHED STONE, 6" THICK, WILL BE AT LEAST 30'X50' AND SHOULD BE UNDERLAIN WITH A SUITABLE SYNTHETIC SEDIMENT FILTER FABRIC AND MAINTAINED. (SEE DETAIL THIS DRAWING.)
10. ALL CATCH BASIN INLETS WILL BE PROTECTED WITH A CRUSHED STONE OR FABRIC FILTER (FILTER DETAILS APPEAR ON THE PLAN).

Rev. No.:	Date:	Description:

REGISTERED ARCHITECT STEVEN FRANK MOOLIN No. 021598 STATE OF NEW YORK

Thomas Associates
Architects, Engineers, Landscape Architects P.C.
Ithaca, Farmingdale, Albany, Buffalo, Jamestown, Rochester, Syracuse, Utica, White Plains, New York
Princeton, New Jersey

City of Rye Recreation Department
Rye, New York

Rye Nursery and Disbrow Park

Rye Nursery
Soil Erosion and Sediment Control Plan

Drawn by:	Date:	Drawing No.:
jtm	August 19, 2002	L12
T+ Project No.: 5724		

PLANT LIST

NO.	SYMBOL	BOTANICAL NAME	COMMON NAME	SIZE	ROOT	REMARKS
7	AC	ABIES CONCOLOR	CONCOLOR FIR	8'-10' HT.	B&B	SEE DETAIL 11/L30
16	BN	BETULA NIGRA	RIVER BIRCH	12'-14' HT.	B&B	MIN 3 STEMS SEE DETAIL 11/L30
14	PM	PRUNUS MARITIMA	BEACH PLUM	3"-3 1/2" CAL	B&B	SEE DETAIL 11/L30
17	PA	PLATANUS ACERIFOLIA	LONDON PLANE TREE	2"-2 1/2" CAL	B&B	SEE DETAIL 11/L30
7	QP	QUERCUS PALUSTRUS	PIN OAK	4"-4 1/2" CAL	B&B	SEE DETAIL 11/L30
9	RM	RHODODENDRON MAXIMUM	ROSEBAY RHODODENDRON	4'-5' HT.	B&B	SEE DETAIL 11/L30
37	RP	RHODODENDRON P.J.M.	P.J.M. RHODODENDRON	24"-30" HT.	B&B	SEE DETAIL 11/L30
8	CA	CORNUS AMOMUM	SILKY DOGWOOD	5'-6' HT.	B&B	SEE DETAIL 11/L30
13	VP	VIBURNUM PRUNIFOLIUM	BLACKHAW VIBURNUM	3'-4' HT.	B&B	SEE DETAIL 11/L30

2 Plant List

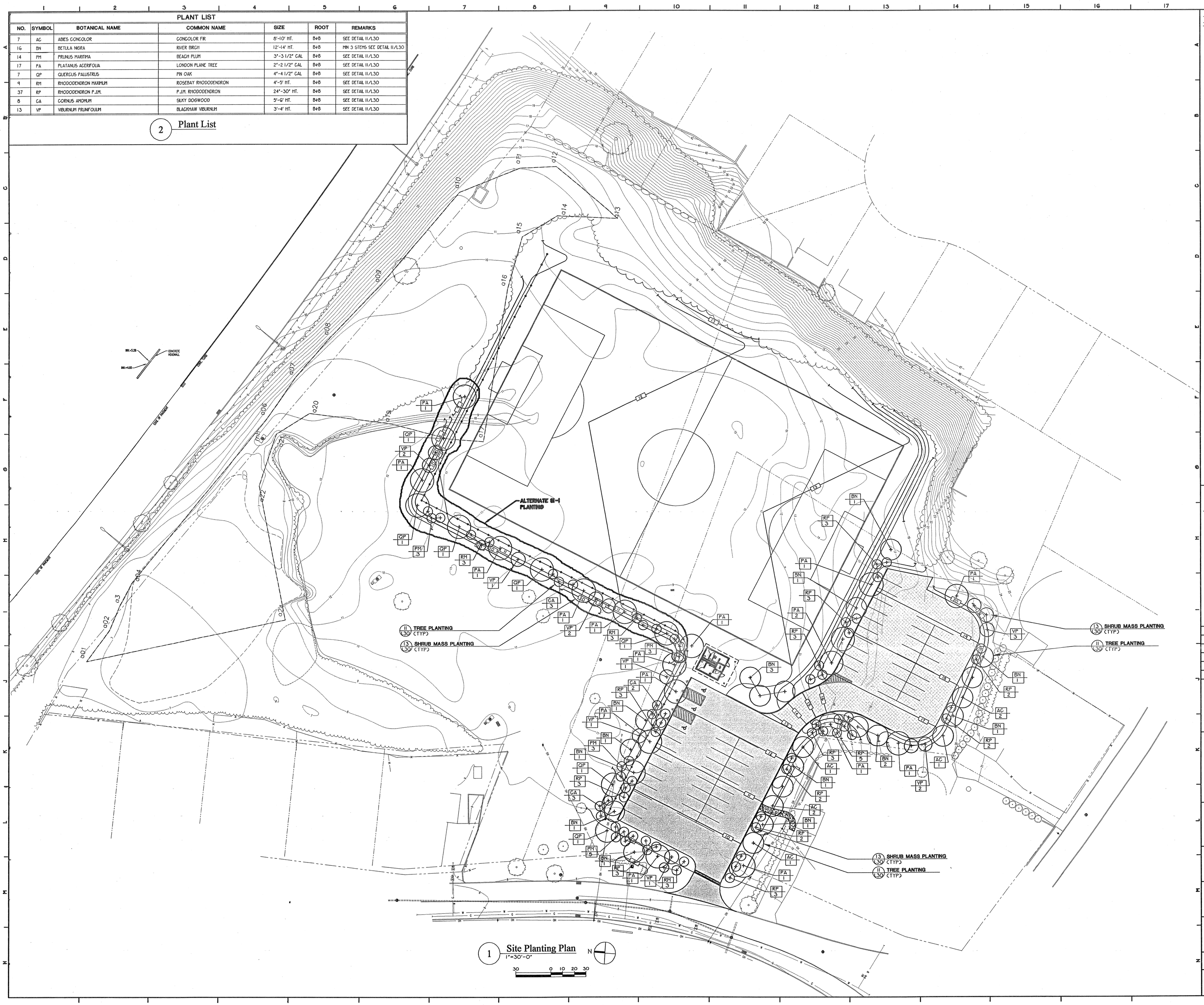

1 Site Planting Plan
1"=30'-0"

Drawing Notes

1. ALL WORK THIS DRAWING TO BE PART OF THE SITE WORK CONTRACT UNLESS OTHERWISE NOTED.
2. REFER TO DRAWING L10 FOR ADDITIONAL GENERAL NOTES.
3. ALL TREES AND SHRUBS WITHIN THE CONSTRUCTION ZONE SHOWN DASHED AND NOT DESIGNATED FOR RELOCATION SHALL BE COMPLETELY REMOVED (ROOTBALL INCLUDED) AND LEGALLY DISPOSED OF.
4. CONTRACTOR SHALL CAREFULLY ROOT PRUNE, BALL AND BURLAP AND TEMPORARILY HEEL-IN PLANT MATERIAL TO BE RELOCATED USING GOOD HORTICULTURAL PRACTICES. PLANTS MUST BE PLACED IN A PROTECTED AREA APPROVED BY THE ARCHITECT . WATERED DAILY DURING SUMMER MONTHS AND INSTALLED AT NEW LOCATIONS SHOWN ON DRAWINGS AS SOON AS CONSTRUCTION WILL PERMIT.
5. ALL NEW PLANT MATERIAL SHALL CONFORM TO THE AMERICAN ASSOCIATION OF NURSERYMAN'S "AMERICAN STANDARD FOR NURSERY STOCK – ANSI Z6.0X" FOR CALIPERS, HEIGHTS, BALL SIZES, ETC.

Rev. No.:	Date:	Description:

REGISTERED ARCHITECT STEVEN FRANK MOLLIN NO. 021568 STATE OF NEW YORK

Thomas Associates
Architects, Engineers, Landscape Architects P.C.
Ithaca, Farmingdale, Albany, Buffalo, Jamestown, Rochester, Syracuse, Utica, White Plains, New York
Princeton, New Jersey

City of Rye Recreation Department
Rye, New York

Rye Nursery and Disbrow Park

Rye Nursery
Site Planting Plan

Drawn by:	Date:	Drawing No.:
jtm	August 19, 2002	L13
T+ Project No.: 5724		

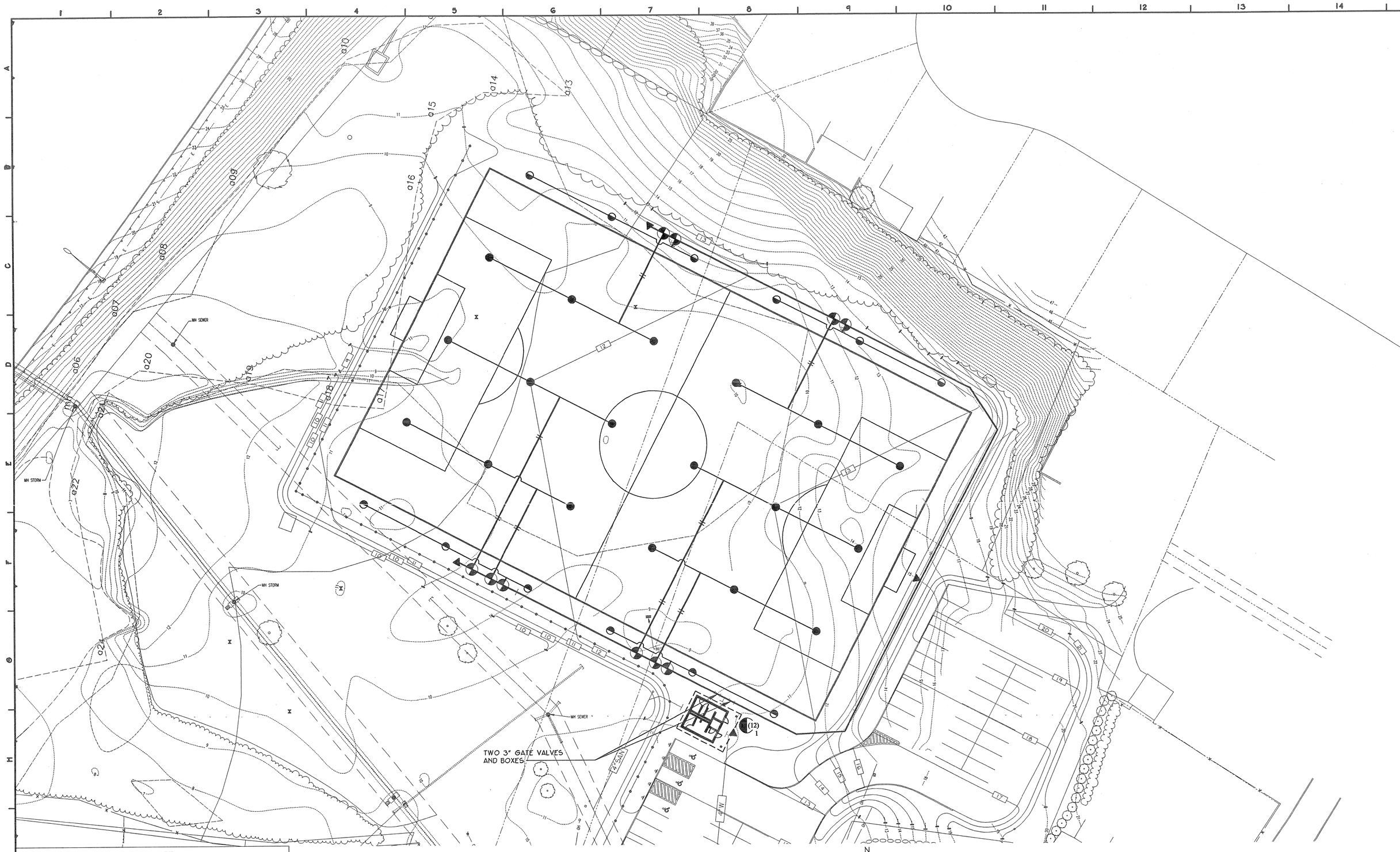

1 Irrigation Plan
1"=30'-0"

LEGEND

SYMBOL	DESCRIPTION
(12) 1	HUNTER ICC-1200M CONTROLLER W/PEDESTAL
●	HUNTER I-40 ROTOR WITH 43 NOZZLE
◒	HUNTER I-40 ROTOR WITH 43 NOZZLE
◓	RAIN BIRD 150-PES-B ELECTRIC VALVE-1 1/2"
▲	RAIN BIRD #5RC QUICK COUPLING VALVE
	MAINLINE PIPE - CL200 RT PVC PIPE - 3" UNLESS NOTED
═	LATERAL PIPE - CL 200 PVC BE/SW - 2"
	LATERAL PIPE - CL 200 PVC BE/SW - 1 1/2"

CONTROLLER IDENTIFICATION

(12) 1 — NUMBER OF STATIONS / CONTROLLER NUMBER

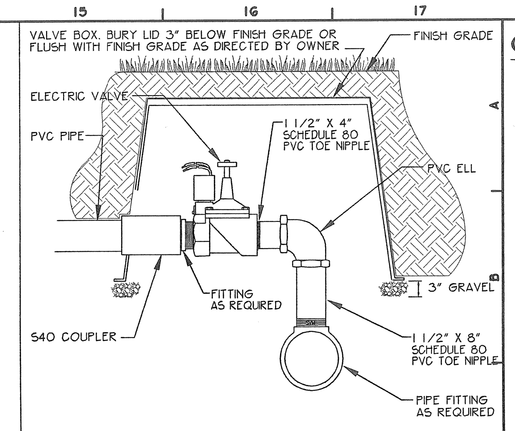

2 Single Electric Valve Assembly
nts SYMBOL = ◓

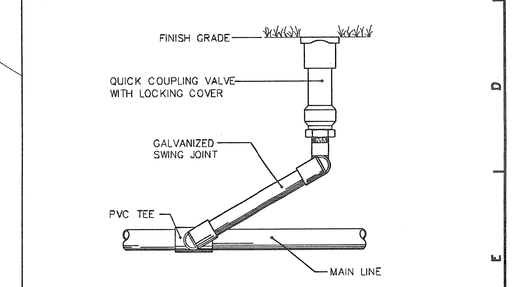

3 Quick Coupling Valve Assembly
nts SYMBOL = ▲

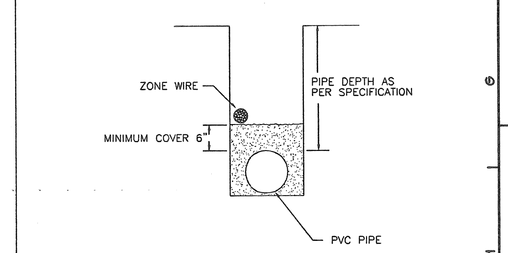

4 Irrigation Trench Detail
nts

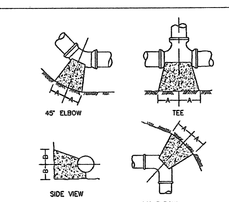

SOIL	SAFE BEARING LOAD (POUNDS PER SQUARE FOOT (PSF))
SOFT CLAY	1000 PSF
SAND	2000 PSF
SANDY LOAM	3000 PSF
HEAVY CLAY	4000 PSF

SOIL	SIZE	90° ELBOW A	90° ELBOW B	45° ELBOW A	45° ELBOW B	TEE A	TEE B
4000 PSF	2 1/2"	8"	10"	6"	8"	3"	8"
	3"	8"	10"	6"	8"	3"	8"
	4"	8"	10"	6"	8"	3"	8"
	6"	8"	10"	6"	8"	3"	8"
	8"	12"	12"	8"	10"	3"	9"
	10"	16"	14"	10"	12"	8"	10"
2000 PSF	2 1/2"	16"	10"	9"	10"	6"	8"
	3"	16"	10"	9"	10"	6"	8"
	4"	16"	10"	9"	10"	6"	8"
	6"	16"	10"	9"	10"	6"	8"
	8"	22"	13"	12"	13"	8"	10"
	10"	26"	17"	14"	17"	10"	13"

1. BLOCKS TO BE POURED AGAINST UNDISTURBED EARTH.
2. THRUST BLOCKS SHALL BE DESIGNED AND CONSTRUCTED FOR 150% OF THE WORKING PRESSURE.
3. MINIMUM COMPRESSIVE STRENGTH OF CONCRETE TO BE 2500 PSI IN 28 DAYS.

5 Irrigation Thrust Block Detail
nts

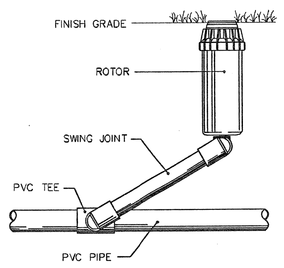

6 Rotor With Swing Joint
nts SYMBOL = ●◒

General Notes

1. ALL WORK THIS DRAWING TO BE PART OF THE SITE WORK CONTRACT UNLESS OTHERWISE NOTED.
2. REFER TO DRAWING L10 FOR ADDITIONAL GENERAL NOTES.

Rev. No.:	Date:	Description:

REGISTERED ARCHITECT STEVEN FRANK MEOLIN No. 021568 STATE OF NEW YORK

Thomas Associates
Architects, Engineers, Landscape Architects P.C.
Ithaca, Farmingdale, Albany, Buffalo, Jamestown, Rochester, Syracuse, Utica, White Plains, New York
Princeton, New Jersey

City of Rye Recreation Department
Rye, New York

Rye Nursery and Disbrow Park

Rye Nursery
Irrigation Plan

Drawn by:	Date:	Drawing No.:
jtm	August 19, 2002	L14
T+ Project No.: 5724		

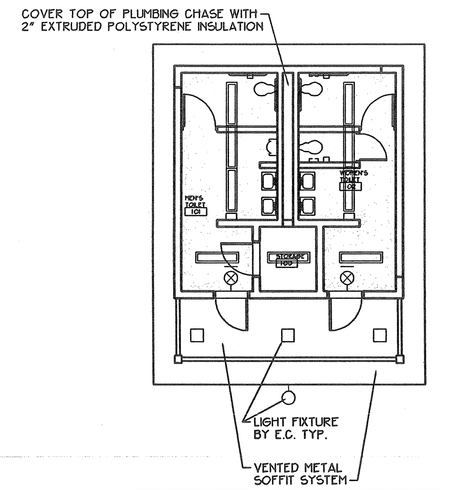

NOTE - ALL CEILINGS ARE 5/8" CEMENT BOARD WITH POLYMER FINISH UNLESS NOTED OTHERWISE.

8 **Reflected Ceiling Plan**
1/8" = 1'-0"

Toilet Rooms - Door Schedule

DOOR NO.		LBL	DOOR TYPE	DOOR MAT	DOOR SIZE	FRAME MAT	HDWR SET	REMARKS
100	1	-	F	HM	3'-0" x 7'-2"	HM	12	
101	1	-	F	FRP	3'-0" x 7'-2"	ALUM	02	6" X 12" LOUVER, SEE ELEV. 2/L10
101	2	-	F	FRP	3'-0" x 5'-0"	ALUM	11	TOP OF FRAME AT 6'-0" AFF
102	1	-	F	FRP	3'-0" x 7'-2"	ALUM	02	6" X 12" LOUVER, SEE ELEV. 2/L16
102	2	-	F	FRP	2'-6" x 5'-0"	ALUM	11	TOP OF FRAME AT 6'-0" AFF
102	3	-	F	FRP	3'-0" x 5'-0"	ALUM	11	TOP OF FRAME AT 6'-0" AFF

NOTE - REFER TO G/L16 FOR HEAD AND JAMB DETAILS
- F = FLUSH DOOR, NO GLAZING

4 **Door Schedule**
No Scale

Equipment Accessory Schedule

ITEM	DESCRIPTION	MANUFACTURER	MODEL #	MOUNTING HGT.
A	GRAB BAR (3'-0" LONG)	BOBRICK	B550 X 36	36" AFF
B	GRAB BAR (3'-6" LONG)	BOBRICK	B550 X 42	36" AFF
C	MIRROR	BOBRICK	B-944G	BOT @ 40" AFF
E	SOAP DISPENSER	BOBRICK	B2112	OVER LAV
F	TOILET PAPER HOLDER	BOBRICK	B2888	BOT @ 24" AFF
J	HAND DRYER	BOBRICK	B-701 115V (SURF. MTD.)	BOT @ 40" AFF
K	SANITARY NAPKIN DISPOSAL	BOBRICK	B254	TOP @ 2'-1" AFF

NOTE: ALL EQUIPMENT IS TO BE SECURED WITH CONCEALED STAINLESS STEEL VANDAL RESISTANT FASTENERS.

5 **Equipment Schedule**
NTS

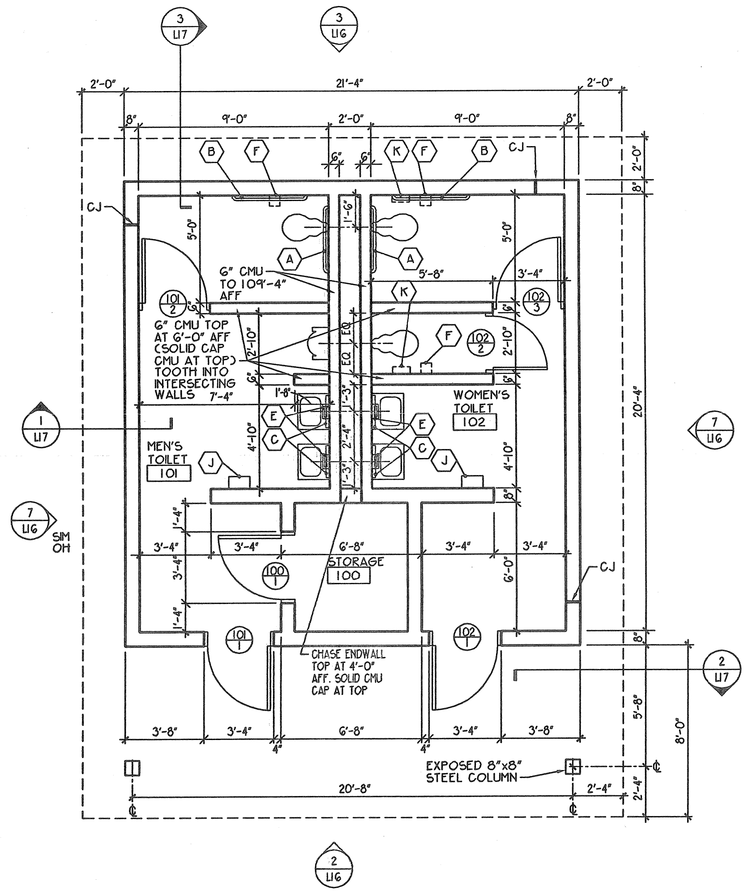

1 **Floor Plan**
1/4" = 1'-0"

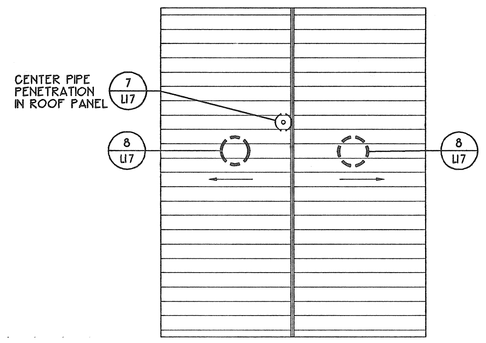

9 **Roof Plan**
1/8" = 1'-0"

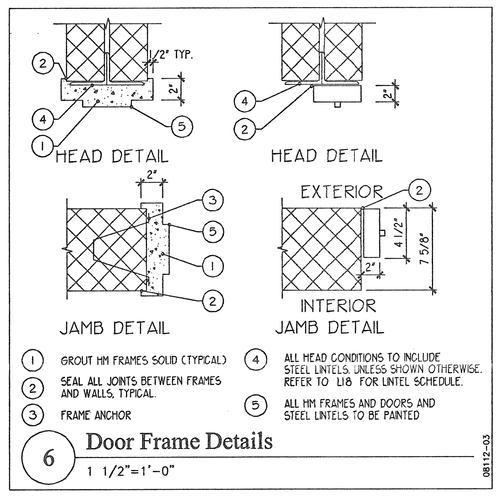

6 **Door Frame Details**
1 1/2"=1'-0"

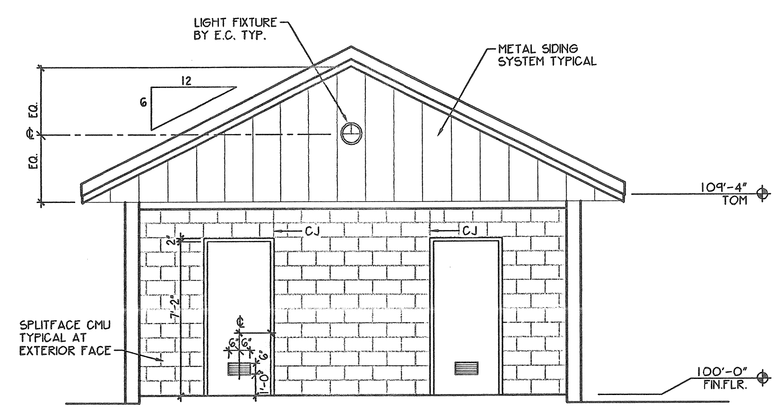

2 **Elevation**
1/4" = 1'-0"

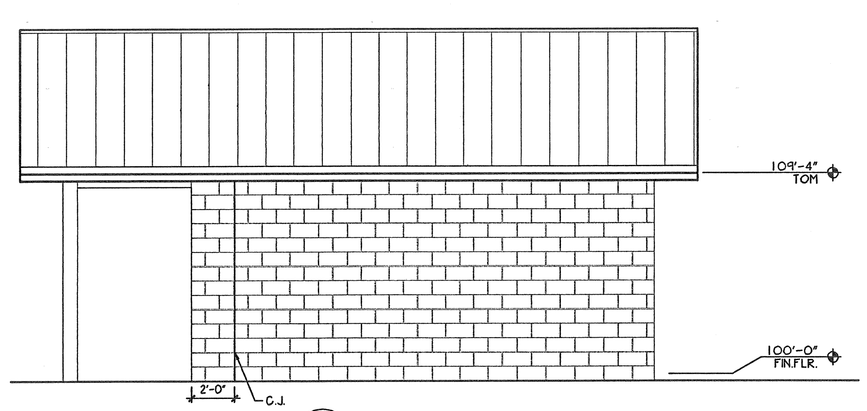

7 **Elevation**
1/4" = 1'-0"

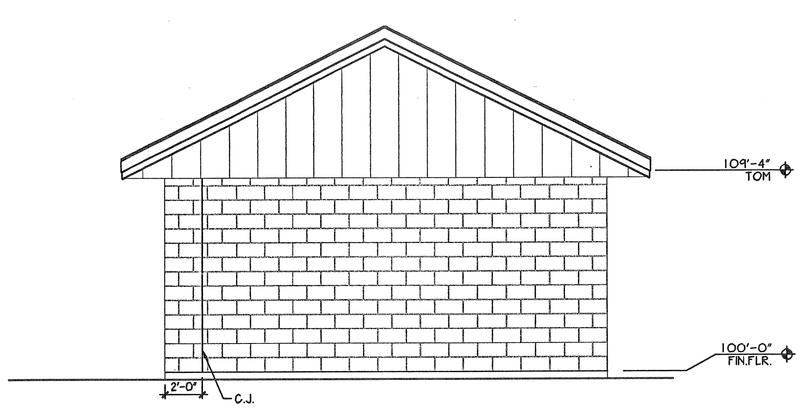

3 **Elevation**
1/4" = 1'-0"

General Notes

1. DO NOT SCALE DRAWINGS TO OBTAIN DIMENSIONS. REFER TO STRUCTURAL OR ARCHITECTURAL DRAWINGS FOR DIMENSIONS REQUIRED. CRITICAL DIMENSIONS NOT FOUND SHOULD BE FIELD VERIFIED OR OBTAINED FROM THE ARCHITECT. IF DISCREPANCIES OCCUR BETWEEN THE STRUCTURAL AND ARCHITECTURAL DRAWINGS, NOTIFY THE ARCHITECT IMMEDIATELY.
2. CONTRACTOR SHALL VERIFY ALL EXISTING CONDITIONS AND DIMENSIONS IN THE FIELD. NOTIFY THE ARCHITECT IMMEDIATELY OF ANY DISCREPANCIES PRIOR TO COMMENCING ANY WORK AFFECTED.
3. UNLESS NOTED OTHERWISE, DIMENSIONS ARE FROM FACE OF MASONRY, FROM FACE OF METAL FRAMING OR FROM FINISHED FACE OF EXISTING CONSTRUCTION. MASONRY DIMENSIONS ARE NOMINAL
4. NOTES ON ONE DRAWING OR DETAIL APPLY TO ALL SIMILAR DRAWINGS OR DETAILS.
5. REFER TO DRAWING L18 FOR STRUCTURAL NOTES AND DETAILS.
6. ALL WALLS ARE TO BE 8" CMU WITH TOP AT 109'-4" (UNLESS NOTED OTHERWISE)
7. BUILDING CONSTRUCTION = TYPE 2B
8. PAINT ALL EXPOSED SURFACES EXCEPT PREFINISHED MATERIALS AND CONCRETE FLOORS. (DO NOT PAINT EXTERIOR SURFACES OF SPLITFACE CMU)

Elevation Coordination

SITE FINISH FLOOR ELEV. = 12.50
ARCHITECTURAL FINISH FLOOR ELEV. = 100.00

Drawing Notes

1. ALL WORK ON THIS DRAWING TO BE PART OF THE SITEWORK CONSTRUCTION CONTRACT UNLESS OTHERWISE NOTED.
2. REFER TO DRAWING L10 FOR GENERAL NOTES.

Rev. No.:	Date:	Description:

REGISTERED ARCHITECT STEVEN FRANK MOLLIN No. 021558 STATE OF NEW YORK

Thomas Associates
Architects + Engineers PC
Ithaca, Farmingdale, Albany & Buffalo New York
Princeton, New Jersey

City of Rye Recreation Department
Rye, New York

Rye Nursery and Disbrow Park

Rye Nursery
Toilet Rooms

Drawn by:	Date:	Drawing No.:
bec	August 19, 2002	L16
T+ Project No.: 5724		

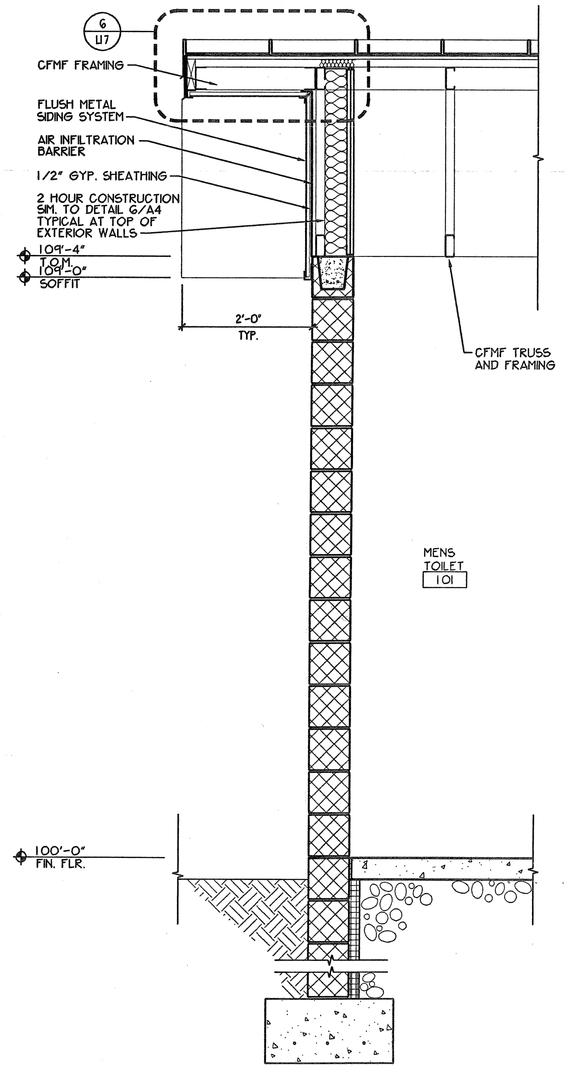

3 **Wall Section**
3/4"=1'-0"

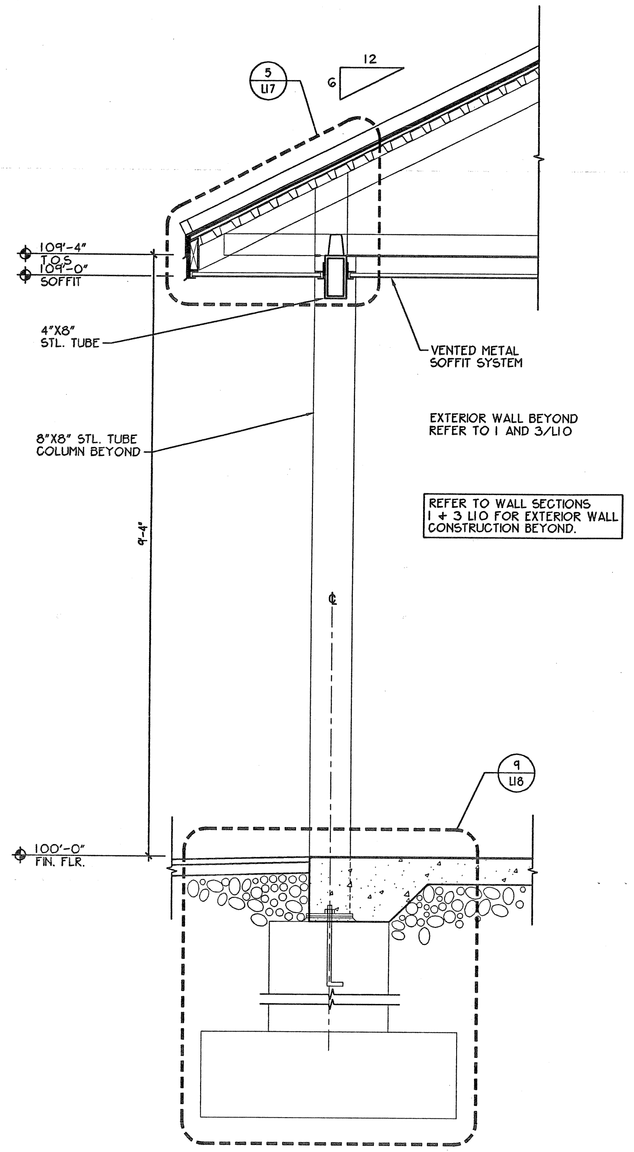

2 **Section at Canopy**
3/4"=1'-0"

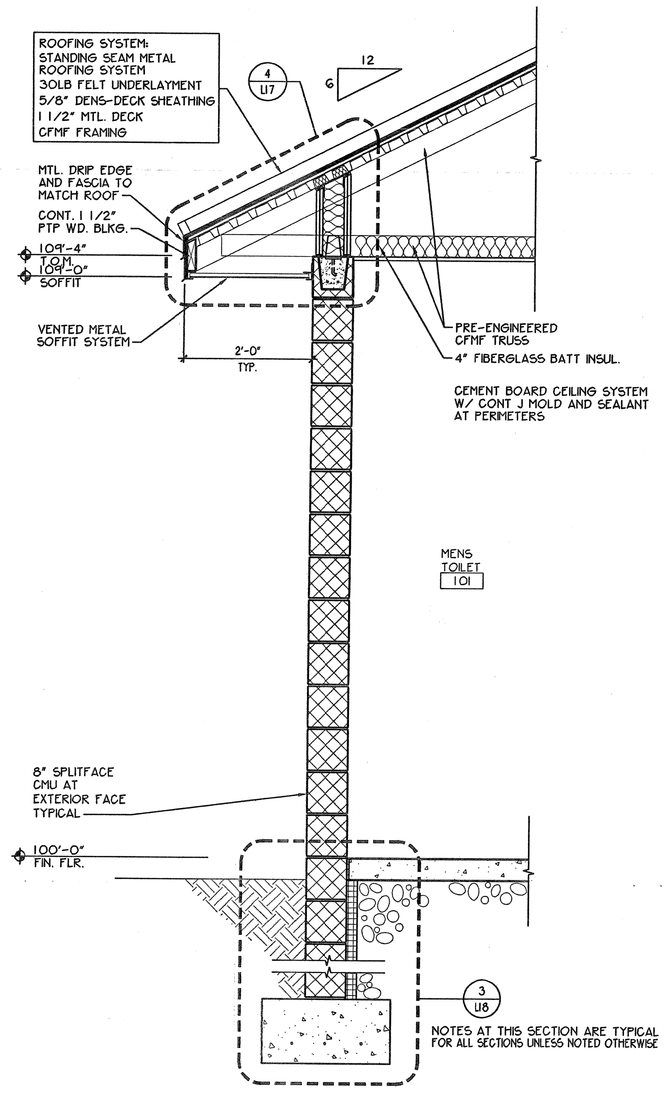

1 **Wall Section**
3/4"=1'-0"

Elevation Coordination
SITE PRESS BOX FINISH FLOOR ELEV. = 142.75
SITE CONCESSION FINISH FLOOR ELEV. = 144.00
ARCHITECTURAL FINISH FLOOR ELEV. = 100.00

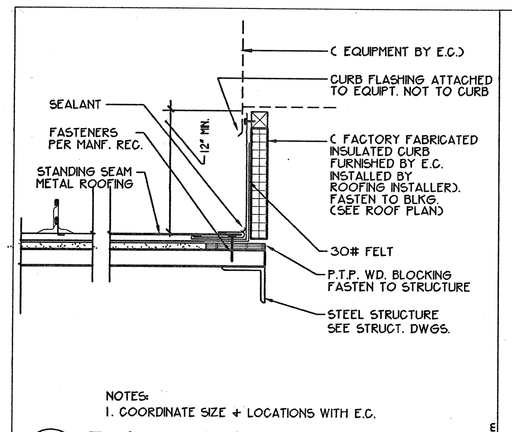

NOTES:
1. COORDINATE SIZE + LOCATIONS WITH E.C.

8 **Equipment Curb Detail**
1 1/2"=1'-0"

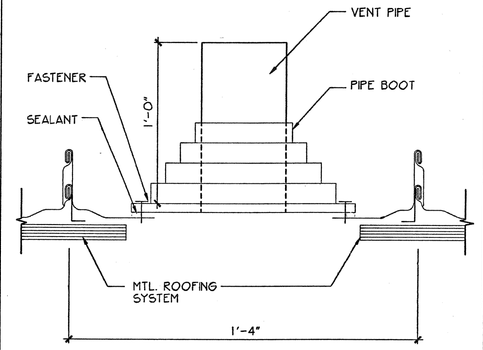

7 **Vent Pipe Flashing Detail**
3"=1'-0"

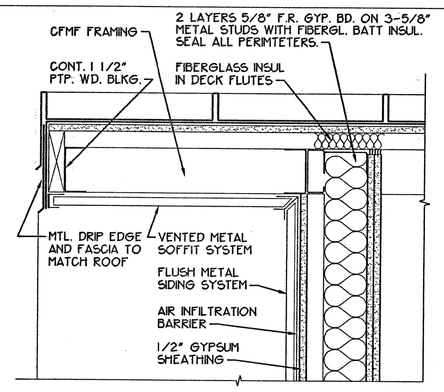

6 **Typical Rake Detail**
1 1/2"=1'-0"

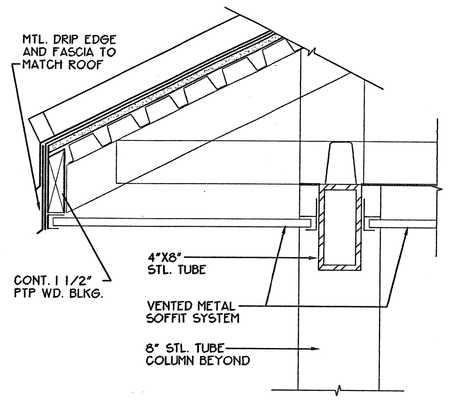

5 **Typical Truss Bearing on Beam**
1 1/2"=1'-0"

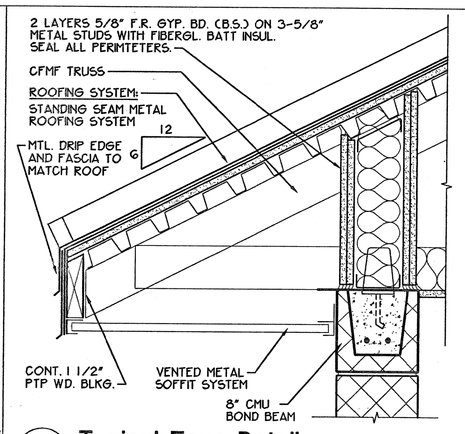

4 **Typical Eave Detail**
1 1/2"=1'-0"

Rev. No.:	Date:	Description:

Thomas Associates
Architects + Engineers PC
Ithaca, Farmingdale, Albany & Buffalo New York
Princeton, New Jersey

City of Rye Recreation Department
Rye, New York

Rye Nursery and Disbrow Park

Rye Nursery
Toilet Rooms
Wall Sections and Details

Drawn by:	Date:	Drawing No.:
bec	August 19, 2002	L17
T+ Project No.: 5724		